1000BASE-ZX SFP 1550nm 80km DOM Industrial Transceiver

SFP1G-ZX-55

Application

- Gigabit Ethernet Switches and Routers
- Fiber Channel Switch Infrastructure
- Other Optical Links

Features

- Operating Data Rate up to 1.25Gbps
- 1550nm DFB Laser Transmitter
- 80km with 9/125 μm SMF
- Single 3.3V Power Supply and TTL Logic Interface
- Hot-Pluggable SFP Footprint Duplex LC Connector Interface
- Class 1 FDA and IEC60825-1 Laser Safety Compliant
- Built-in digital diagnostic functions, including optical power monitoring
- Industrial Temperature Range : -40 to 85℃ (-40 to 185°F)
- Compliant with MSA SFP Specification
- Compliant with SFF-8472

Description

The SFP1G-ZX-55 series single-mode transceiver is small form factor pluggable module for serial optical data communications such as Gigabit Ethernet 1000BASE-ZX and Fiber Channel 1x SM-LC-L FC-PI. It is with the SFP 20-pin connector to allow hot plug capability. This module is designed for single mode fiber and operates at a nominal wavelength of 1550nm.

The transmitter section uses a multiple quantum well 1550nm DFB laser and is a class 1 laser compliant according to International Safety Standard IEC-60825. The receiver section uses an integrated InGaAs detector preamplifier (IDP) mounted in an optical header and a limiting post-amplifier IC. The SFP1G-ZX-55 series are designed to be compliant with SFF-8472 SFP Multi-Source Agreement (MSA).

Product Specifications

I. General Product Characteristics

Parameter	Symbol	Min	Typ.	Max	Unit
Bit Rate	BR			1.25	Gb/s
Max. Supported Link Length	LMAX			80	km

II. Absolute Maximum Ratings

*Exceeding any one of these values may destroy the device immediately.

Data Rate Specifications	Symbol	Min	Max	Units
Storage Temperature	Ts	-40	+85	℃
Supply Voltage	Vcc	-0.5	3.6	V
Operating Relative Humidity		-	95	%

III. Optical and Electrical Characteristics

Parameter		Symbol	Min	Typ.	Max	Unit
50μm Core Diameter SMF		L		80		km
Power Supply Voltage		VCC	3.15	3.3	3.45	V
Power Supply Current		ICC			300	Ma
Date Rate	**GBE**			1.25		Gbps
	FC			1.063		
Transmitter						
Center Wavelength		λC	1500	1550	1580	nm
Spectral Width (RMS)		Δλ			1	nm
Side Mode Suppression Ratio		SMSR	30			dB
Average Output Power*(note1)		Pout	0		5	dBm
Extinction Ratio*(note2)		ER	9			Db
Rise/Fall Time(20%～80%)		tr/tf			0.26	ps
Total Jitter*(note2)		TJ			0.43	UI
Output Optical Eye*(note2)		IEEE802.3z and ANSI Fiber Channel Compliant*(note4)				
TX_Disable Assert Time		t_off			10	us
Pout@TX Disable Asserted		Pout			-45	dBm

Receiver

Center Wavelength	λC	1260		1600	nm
Receiver Sensitivity*(note6)	Pmin			-24	dBm
Receiver Overload	Pmax	-3			dBm
Return Loss		12			Db
Optical Path Penalty*(note7)				1	dB
LOS De-Assert	LOSD			-25	dB
LOS Assert	LOSA	-35			dBm
LOS Hysteresis*(note8)		0.5			Db

Notes:

1. Output is coupled into a 9/125μm single mode fiber.
2. Filtered, measured with a PRBS 27-1 test pattern @1.25Gbps.
3. Minimum average optical power measured at BER less than 1E-12, with a 27-1 PRBS and ER=9 Db.
4. Measured with a PRBS 27-1 test pattern @1.25Gbps, G.652 SMF, BER≤1×10-10.
5. Eye Pattern Mask.

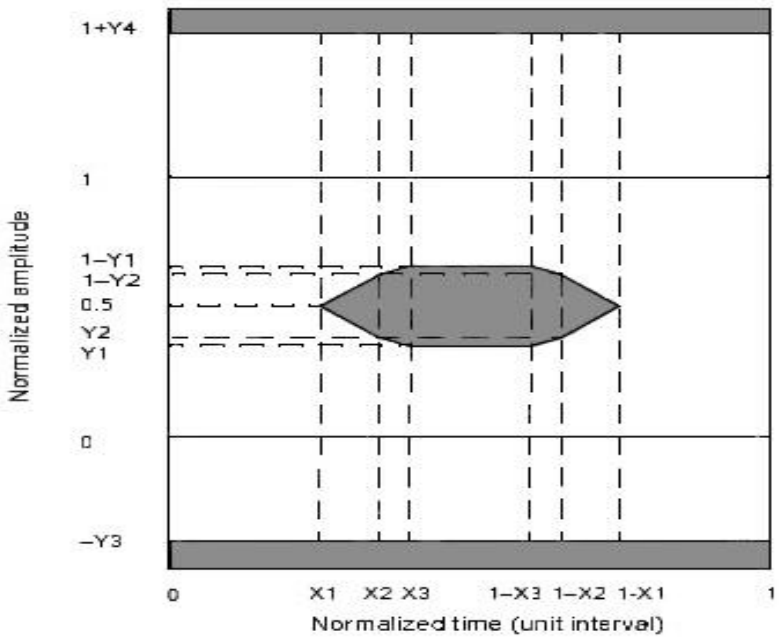

6. LOS Hysteresis

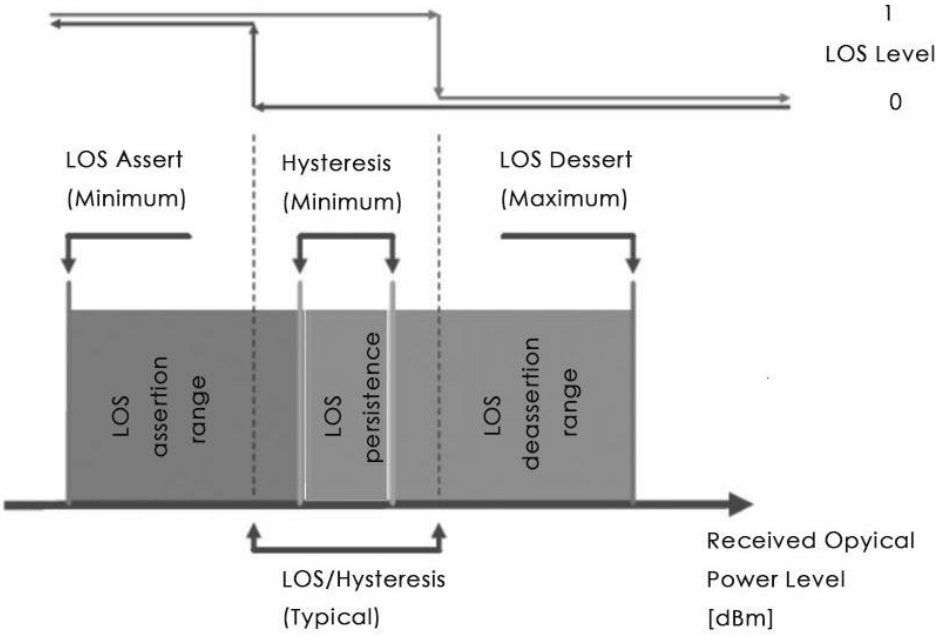

IV. Pin Description

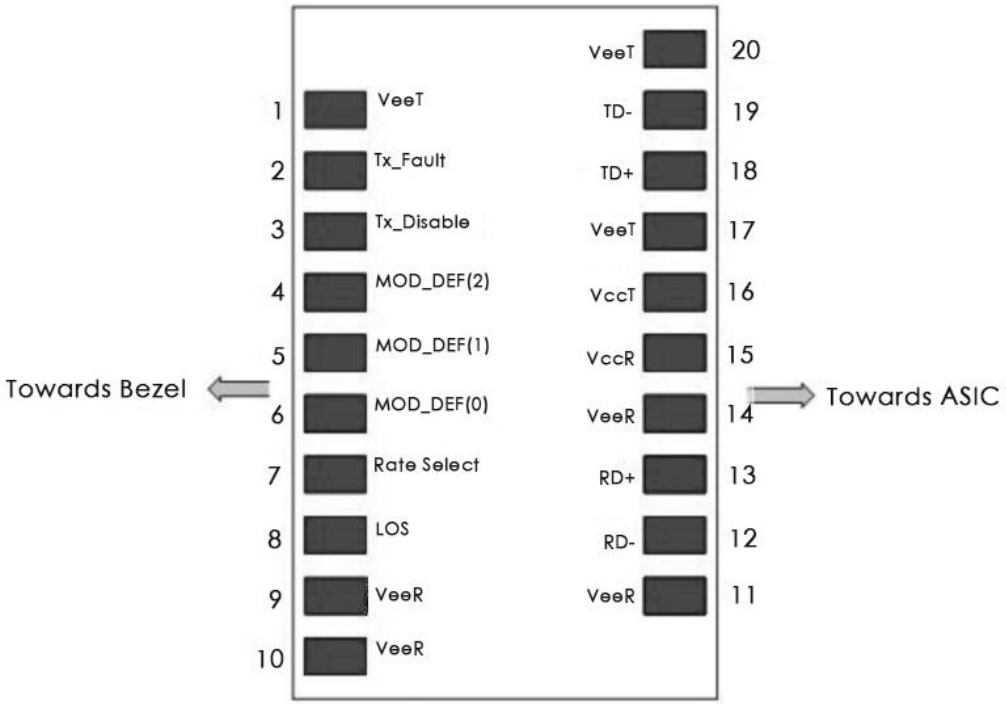

Pin Num.	Name	Function	Plug Seq.	Notes
1	VeeT	Transmitter Ground	1	Note5
2	TX Fault	Transmitter Fault Indication	3	Note 1
3	TX Disable	Transmitter Disable	3	Note 2 Module disables on high or open
4	MOD-DEF2	SDA	3	Note 3 2 wire serial ID interface.
5	MOD-DEF1	SCL	3	Note 3 2 wire serial ID interface.
6	MOD-DEF0	MOD_ABS	3	Note 3 Grounded within the module.
7	Rate Select	Not Connect	3	Function not available
8	LOS	Loss of Signal	3	Note 4
9	VeeR	Receiver Ground	1	Note 5
10	VeeR	Receiver Ground	1	Note 5
11	VeeR	Receiver Ground	1	Note 5
12	RD-	Inv. Received Data Out	3	Note 6
13	RD+	Received Data Out	3	Note 7
14	VeeR	Receiver Ground	1	Note 5
15	VccR	Receiver Power	2	Note 7 3.3V ± 5%
16	VccT	Transmitter Power	2	Note 7 3.3V ± 5%
17	VeeT	Transmitter Ground	1	Note 5
18	TD+	Transmit Data In	3	Note 8
19	TD-	Inv. Transmit Data In	3	Note 8
20	VeeT	Transmitter Ground	1	Note 5

Notes:

1.TX Fault is an open collector/drain output, which should be pulled up with a 4.7K - 10KΩ resistor on the host board. Pull up voltage between 2.0V and VccT, R+0.3V. When high, output indicates a laser fault of some kinds. Low indicates normal operation. In low state, the output will be pulled to < 0.8V.

2.TX disable is an input that is used to shut down the transmitter optical output. It is pulled up within the module with a 4.7 – 10 KΩ resistor. Its states are: Low (0 – 0.8V): Transmitter on (>0.8, < 2.0V): Undefined High (2.0 – 3.465V): Transmitter Disabled Open: Transmitter Disabled

3.Mod-Def 0,1,2. These are the module definition pins. They should be pulled up with a 4.7 – 10 KΩ resistor on the host board. The pull-up voltage shall be VccT or VccR . Mod-Def 0 is grounded by the module to indicate that the module is present Mod-Def 1 is the clock line of two wire serial interface for serial ID Mod-Def 2 is the data line of two wire serial interface for serial ID

4.LOS (Loss of Signal) is an open collector/drain output, which should be pulled up with a 4.7K – 10KΩ resistor. Pull up voltage between 2.0V and VccT/R+0.3V. When high, this output indicates the received optical power is below the worst-case receiver sensitivity (as defined by the standard in use). Low indicates normal operation. In the low state, the output will be pulled to < 0.8V.

5.VeeR and VeeT may be internally connected within the SFP module.

6.RD-/+: These are the differential receiver outputs. They are AC coupled 100Ω differential lines which should be terminated with 100Ω (differential) at the user SERDES. The AC coupling is done inside the module and is thus not required the host board. The voltage swing on these lines will be between 400 and 2000 mV differential (200 –1000 mV single ended) when properly terminated.

7. VccR and VccT are the receiver and transmitter power supplies. They are defined as 3.3V ±5% at the SFP connector pin. Maximum supply current is 300mA. Recommended host board power supply filtering is shown below. Inductors with DC resistance of less than 1 ohm should be used in order to maintain the required voltage at the SFP input pin with 3.3V supply voltage.When the recommended supply-filtering network is used, hot plugging of the SFP transceiver module will result in an inrush current of no more than 30mA greater than the steady state value. VccR and VccT may be internally connected within the SFP transceiver module.

8.TD-/+: TD-/+: These are the differential transmitter inputs. They are AC-coupled, differential lines with 100Ωdifferential termination inside the module.The AC coupling is done inside the module and is thus not required on the host board. The inputs will accept differential swings of 400–2000mV (200–1000mV single- ended).

V. Mechanical Specifications

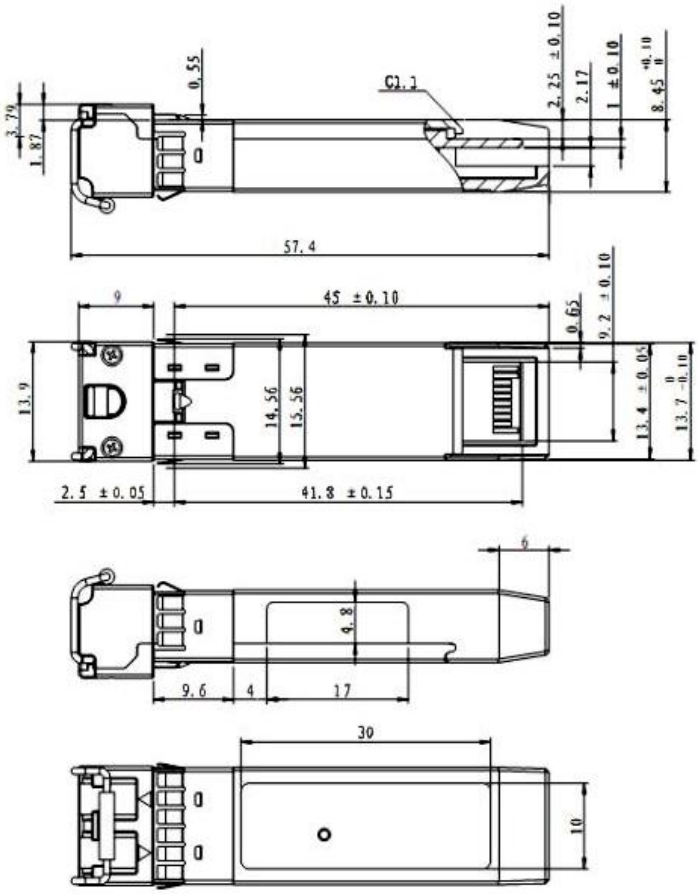

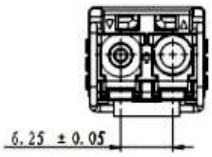

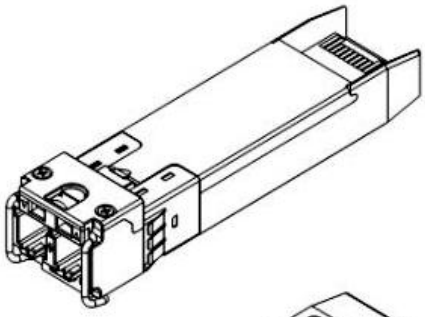

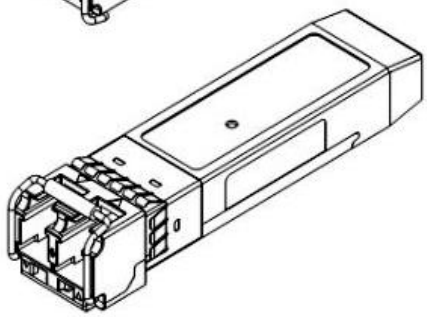

Test Center

FS.COM transceivers are tested to ensure connectivity and compatibility in our test center before shipped out. FS.COM test center is supported by a variety of mainstream original brand switches and groups of professional staff, helping our customers make the most efficient use of our products in their systems, network designs and deployments.

The original switches could be found nowhere but at FS.COM test center, eg: Juniper MX960 & EX 4300 series, Cisco Nexus 9396PX & Cisco ASR 9000 Series, HP 5900 Series & HP 5406R ZL2 V3(J9996A), Arista 7050S-64, Brocade ICX7750-26Q & ICX6610-48, Avaya VSP 7000 MDA 2, etc.

Cisco ASR 9000 Series(A9K-MPA-X40GE)

ARISTA 7050S-64(DCS-7050S-64)

Juniper MX960

Brocade ICX 7750-26Q

Extreme Networks X670V VIM-40G4X

Mellanox M3601Q

Dell N4032F

HP 5406R ZL2 V3(J9996A)

AVAYA 7024XLS(7002QQ-MDA)

Dell N4032F

HP 5406R ZL2 V3(J9996A)

AVAYA 7024XLS(7002QQ-MDA)

Test Assured Program

FS.COM truly understands the value of compatibility and interoperability to each optics. Every module FS.COM provides must run through programming and an extensive series of platform diagnostic tests to prove its performance and compatibility. In our test center, we care of every detail from staff to facilities—professionally trained staff, advanced test facilities and comprehensive original-brand switches, to ensure our customers to receive the optics with superior quality.

Our smart data system allows effective product management and quality control according to the unique serial number, properly tracking the order, shipment and every part.

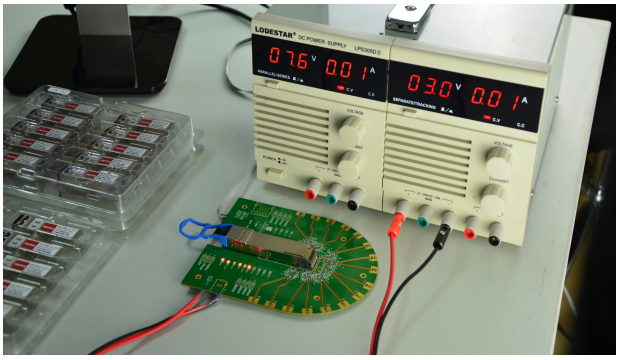

Our in-house coding facility programs all of our parts to standard OEM specs for compatibility on all major vendors and systems such as Cisco, Juniper, Brocade, HP, Dell, Arista and so on.

With a comprehensive line of original-brand switches, we can recreate an environment and test each optics in practical application to ensure quality and distance.

The last test assured step to ensure our products to be shipped with perfect package.

Order Information

Part Number	Description
SFP1G-SX- 85	SFP, 1000BASE-SX, 850nm, MMF, 550m, LC, DOM
SFP1G-SX-31	SFP, 1000BASE-SX,1310nm, SMF, 2km, LC, DOM
SFP1G-LX-31	SFP, 1000BASE-LX,1310nm, SMF, 10km, LC, DOM
SFP1G-LX-31	SFP, 1000BASE-LX,1310nm, SMF, 15km, LC, DOM
SFP1G-LX-31	SFP, 1000BASE-LX/LH,1310nm, SMF, 20km, LC, DOM
SFP1G-LH-31	SFP, 1000BASE-EX, 1310nm, SMF, 40km, LC, DOM
SFP1G-EX-55	SFP, 1000BASE-EX, 1550nm, SMF, 40km, LC, DOM
SFP1G-ZX-55	SFP, 1000BASE-EX, 1550nm, SMF, 60km, LC, DOM
SFP1G-ZX-55	SFP, 1000BASE-ZX, 1550nm, SMF, 80km, LC, DOM
SFP1G-EZX-55	SFP, 1000BASE-EZX, 1550nm, SMF, 100km, LC, DOM
SFP1G-EZX-55	SFP, 1000BASE-EZX, 1550nm, SMF, 120km, LC, DOM
SFP-GB-T	SFP, 10/100/1000Base-T, SERDES/SGMII Interface
SFP-GB-T	SFP, 10/100/1000Base-T, SERDES Interface

Note:

1G SFP transceiver module is individually tested on corresponding equipment such as Cisco, Arista, Juniper, Dell, Brocade and other brands, and passes the monitoring of FS.COM intelligent quality control system.