1000BASE-SX SFP 850nm 550m DOM Industrial Transceiver

SFP1G-SX-85-I

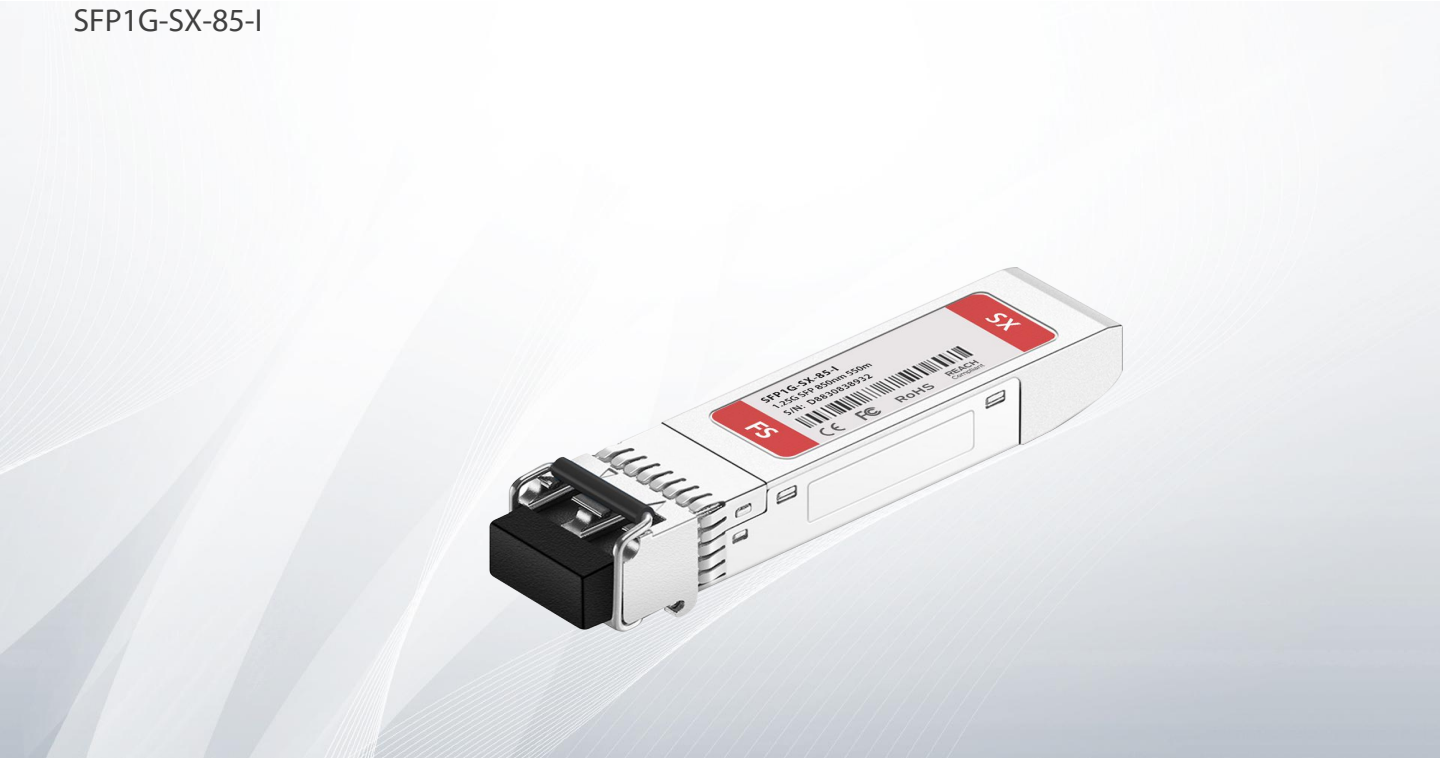

Application

- Gigabit Ethernet Switches and Routers
- Fiber Channel Switch Infrastructure
- Other Optical Links

Features

- Operating Data Rate up to 1.25Gbps
- 850nm VCSEL Laser Transmitter
- 550m with 50/125 μm MMF
- 300m with 62.5/125 μm MMF
- Single 3.3V Power Supply
- Hot-Pluggable SFP Footprint Duplex LC Connector Interface
- Operating Case Temperature : -40℃~+85℃
- Compliant with MSA SFP Specification
- Digital Diagnostic Monitor
- Class 1 FDA and IEC60825-1 Laser Safety Compliant
- ROHS 2.0 Compatible

Description

The SFP transceivers are high performance, cost effective modules supporting data-rate of 1.25Gbps and 550m transmission distance with MMF. The transceiver consists of three sections: a VCSEL laser transmitter, a PIN photodiode integrated with a trans-impedance preamplifier (TIA) and MCU control unit. All modules satisfy class I laser safety requirements. The transceivers are compatible with SFP Multi-Source Agreement (MSA) and SFF-8472. For further information, please refer to SFP MSA.

Block Diagram

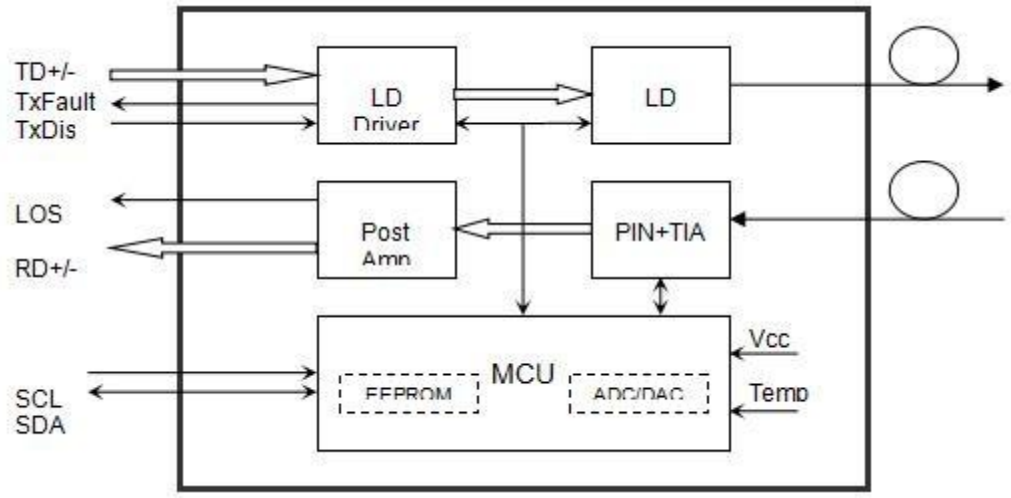

Figure 1 Transceiver Functional Diagram

Product Specifications

I. Absolute Maximum Ratings

Parameter	Symbol	Unit	Min	Max
Storage Temperature Range	Ts	℃	-40	85
Relative Humidity	RH	%	0	85
Supply Voltage	Vcc	V	-0.3	4.0

II. Recommended Operating Conditions

Parameter	Unit	Min	Type	Max
Form Factor			SFP	
Data Rate	Gb/s		1.25	
Applications			Ethernet, FC	
Optical Receptacle Type			LC	
Fiber Type			MMF	
Fiber Distance	Km	0.3		0.5
Power Consumption	W			1
Operating Case Temperature	℃	-40		85
DDM Calibration Type			Inside Calibration	
Rate Select Function			No Request	
IIC Clock Frequency	KHz	100		400
IIC Clock Stretching	us			500
IIC THD: Data Hold Time	ns	300		

III. Electrical Characteristics (Tc=-40℃ to 85℃ and Vcc= 3.135 to 3.465V)

Parameter		Unit	Min	Type	Max
Supply Voltage		V	3.135	3.30	3.465
Supply Current		mA			300
Maximum Sustained Peak Current (<500ms)		mA			600
Input Differential Impedance		Ω		100	
Differential Data Input Swing		mV	400		2400
Differential Data Output Swing		mV	700		1000
LOS Squelch (Yes&No)				Yes	
Tx Fault, LOS Output	**High**	V	2.0		Vcc
Voltage	**Low**	V	Vee		Vee+0.8
Tx Disable	**VIL**	V	2.0		Vcc
	VIH	V	Vee		Vee+0.8

IV.Optical Characteristics (Tc=-40℃ to 85℃, Vcc= 3.14 to 3.46V, Data rate: 1.25Gb/s)

Parameter	Unit	Min	Type	Max
Transmitter Optical Characteristics				
Laser Type			VSCEL	
Output Average Power	dBm	-9.5		-3
Center Wavelength	nm		850	

Parameter		Unit	Min	Type	Max
Wavelength Range		nm	830		860
Spectral Width		nm			0.85
Extinction Ratio (ER)		dB	8.2		
Eye Mask Margin (1000 consecutive snapshots at typical rate and room temperature)		Compliant with IEEE 802.3			
Transmitter and Dispersion Penalty		dB			3.9
RIN12OMA		dB/Hz			-128
Optical Power for TX DISABLE		dBm			-40
Optical Return Loss Tolerance		dB			12
Receiver Optical Characteristics					
Operating Wavelength		nm	760		860
Sensitivity		dBm			-17
Saturation Power		dBm	-3		
Max Input Power		dBm	0		
LOS	**Assert**	dBm	-35		
	De-assert	dBm			-18
	Hysteresis	dB	0.5		
Optical Return Loss		dB	12		

Pin Function Definitions

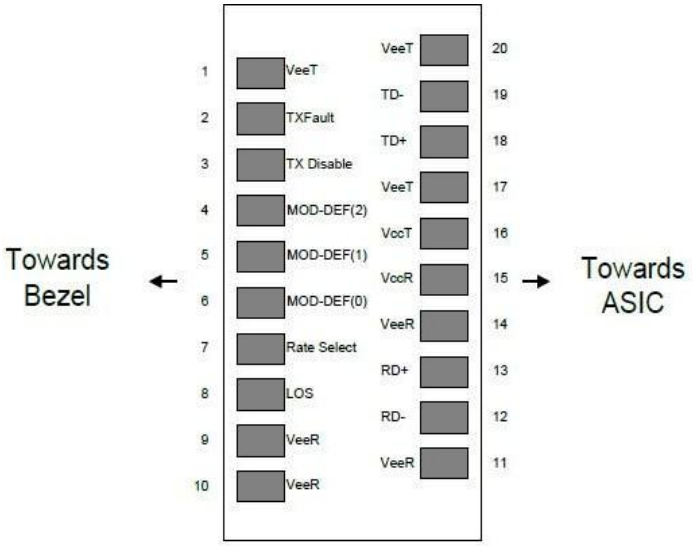

Figure 2 Pin Function Definitions

Transceiver Pin Descriptions

Pin Number	Symbol	Name	Description
1,17,20	VeeT	Transmitter Signal Ground	These pins should be connected to signal ground on the host board.
2	TX Fault	Transmitter Fault Out (OC)	Logic "1" Output = Laser Fault (Laser off before t_fault) Logic "0" Output = Normal Operation This pin is open collector compatible, and should be pulled up to Host Vcc with a 10kΩ resistor.
3	TX Disable	Transmitter Disable In (LVTTL)	Logic "1" Input (or no connection) = Laser off Logic "0" Input = Laser on This pin is internally pulled up to VccT with a 10 kΩ resistor.
4	SDA	Module Definition Identifiers	Serial ID with SFF 8472 Diagnostics Module Definition pins should be pulled up to Host Vcc with 10 kΩ resistors.
5	SCL		
6	MOD-ABS		

Pin Number	Symbol	Name	Description
7	RS0	Not Connect	Not Connect
8	LOS	Loss of Signal Out (OC)	Sufficient optical signal for potential BER < 1x10-12 = Logic "0" Insufficient optical signal for potential BER < 1x10-12 = Logic "1" This pin is open collector compatible, and should be pulled up to Host Vcc with a 10kΩ resistor.
9，10,11,14	VeeR	Receiver Signal Ground	These pins should be connected to signal ground on the host board.
12	RD-	Receiver Negative DATA Out	Light on = Logic "0" Output Receiver DATA output is internally AC coupled and series terminated with a 50Ω resistor.
13	RD+	Receiver Negative DATA Out	Light on = Logic "1" Output Receiver DATA output is internally AC coupled and series terminated with a 50Ω resistor.
15	VccR	Receiver Power Supply	This pin should be connected to a filtered +3.3V power supply on the host board. See Figure 3.Recommended power supply filter
16	VccT	Receiver Power Supply	This pin should be connected to a filtered +3.3V power supply on the host board. See Figure 3.Recommended power supply filter
18	TD+	Transmitter Positive DATA	Logic "1" Input = Light on Transmitter DATA inputs are internally AC coupledand terminated with a differential 100Ω resistor.
19	TD-	Transmitter Negative	Logic "0" Input = Light on Transmitter DATA inputs are internally AC coupled and terminated with a differential 100Ω resistor.

Typical Application Circuit

*Recommended "Typical Application Schematics"are shown in Figure 3.

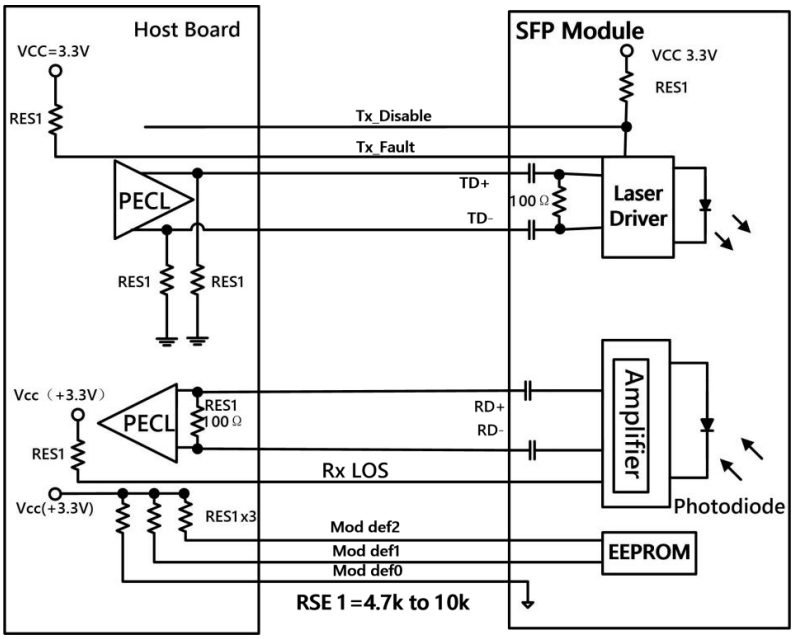

Figure 3 Typical Application Schematics

Electrostatic Discharge (ESD)

The RTXM191-552-F00 is compatible with ESD levels found in typical manufacturing and operating environments as described in Table Regulatory compliance. In the normal handling and operation of optical transceivers, ESD is of concern in two circumstances. The first case is during handling of the transceiver prior to insertion into an SFP compliant cage. To protect the device, it's important to use normal ESD handling pre-cautions. These include use of grounded wrist straps, work-benches and floor wherever a transceiver is handled.

The second case to consider is static discharges to the exterior of the host equipment chassis after installation. If the optical interface is exposed to the exterior of host equipment cabinet, the transceiver may be subject to system level ESD requirements.

Electromagnetic Interference (EMI)

Equipment incorporating gigabit transceivers is typically subject to regulation by the FCC in the United States, CENELEC EN55022 (CISPR 22) in Europe. The RTXM191-550-F00compliance to these standards is detailed in Table Regulatory compliance. The metal housing and shielded design of the RTXM191-550-F00 minimizes the EMI challenge facing the equipment designer.

EMI Immunity (Susceptibility)

Due to its shielded design, the EMI immunity of the RTXM191-550-F00exceeds typical industry standards.

Regulatory Compliance

Feature	Test Method	Performance
Electrostatic Discharge (ESD) to the Electrical Pins	MIL-STD-883C Method 3015.7	Class 1 (> 1500 Volts
Electrostatic Discharge (ESD) to the Duplex LC Receptacle	Variation of IEC 61000-4-2	Typically, no damage occurs with 15 kV when the duplex LC connector receptacle is contacted by a Human Body Model probe.
Electromagnetic Interference (EMI)	CISPR22 ITE Class B EN55022 Class B FCC Class B	Compliant with standards
Immunity	IEC61000-4-3 Class 2 EN55024	Typically show no measurable effect from a 3V/m field swept from 80 to 1000MHz applied to the transceiver without a chassis enclosure.

Digital Diagnostic Interface Definition

*The 2-wire serial interface addresses of the SFP module are 1010000x (A0h) and 1010001x (A2h). They are shown in Figure 4.

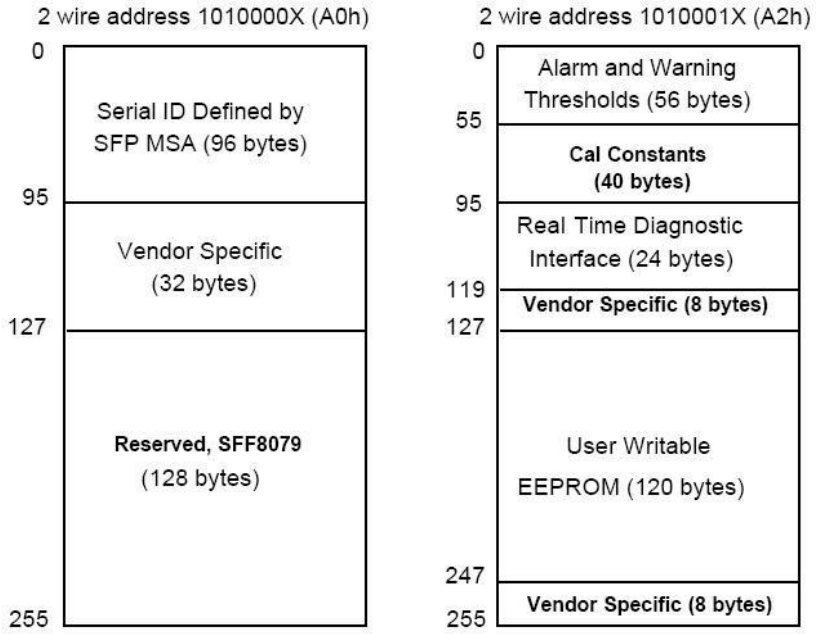

Figure 4 Digital Diagnostic Memory Map

Diagnostic Monitor Functions

Diagnostic Monitor Functions interface uses the 2 wire address 1010001X (A2). Memory contents of Diagnostic Monitor Functions are shown in table below.

I. Memory Contents of Diagnostic Monitor Function

(1)DDM Threshold

Paramters	High Alarm	Low Alarm	High Warning	Low Warning
Temperature	80	-10	70	0
Voltage	3.6	3	3.5	3.1
Ibias	75	1	70	2
Tx Power	-1	-11.5	-3	-9.5
Rx Power	-1	-19	-3	-17

(2)DDM Accuracy Requirements

Parameters	Unit	Requirements
Temperature	℃	+/-3
Voltage	V	+/-3%
Ibias	mA	+/-10%
Tx Power	dB	+/-3dB
Rx Power	dB	+/-3dB

(3)DDM Enhanced Options

Parameters	Requirements
Soft Tx-disable	support
Soft Tx-fault	support
Soft Rx-los	support

Package Outline

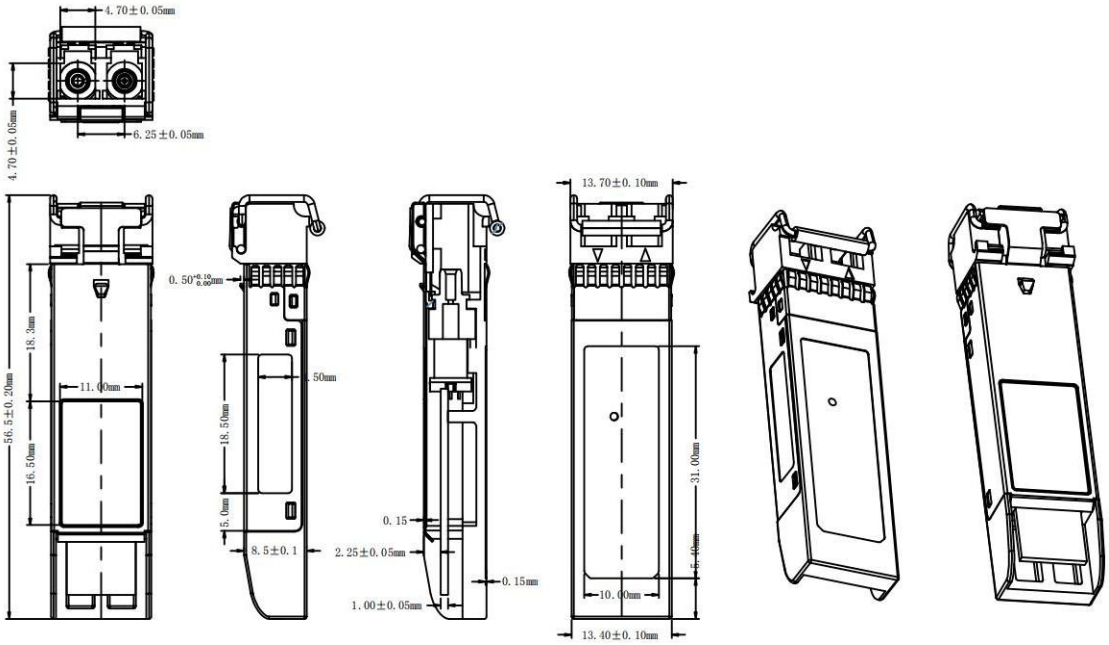

Test Center

I. Compatibility Testing

Each fiber optical transceiver has been tested in host device on site in FS Assured Program to ensure full compatibility with over 200 vendors.

Cisco Catalyst C9500-24Y4C

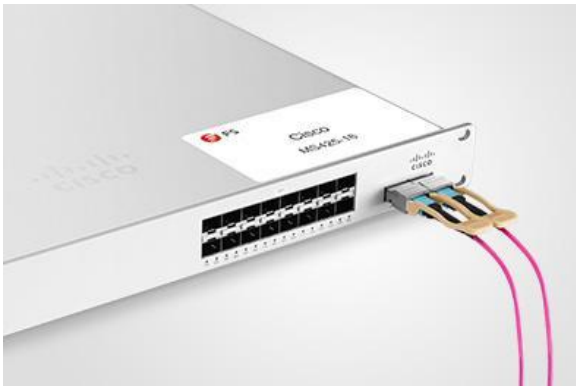

Cisco MS425-16

Brocade VDX 6940-144S

Dell EMC Networking Z9100-ON

Force⑩tm S60-44T

HUAWEI S6720-30L-HI-24S

Above is part of our test bed network equipment. For more information, please click the Test Bed PDF. It will be updated in real time as we expand our portfolio.

II. Performance Testing

Each fiber optical transceiver has been fully tested in FS Assured Program equipped with world's most advanced analytical equipment to ensure that our transceivers work perfectly on your device.

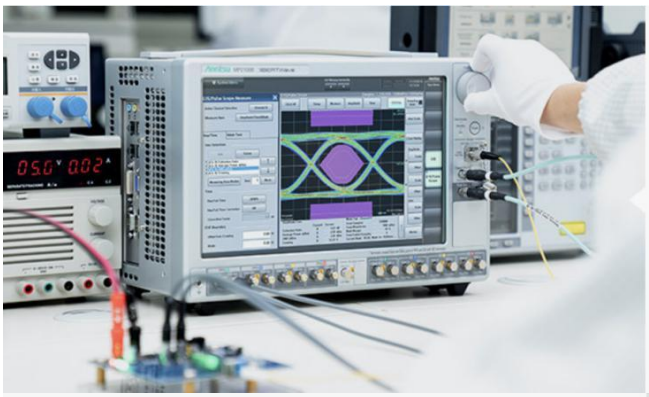

1. TX/RX Signal Quality Testing

Equipped with the all-in-one tester integrated 4ch BERT & sampling oscilloscope, and variable optical attenuator to ensure the input and output signal quality.

- Eye Pattern Measurements: Jitter, Mask Margin, etc
- Average Output Power
- OMA
- Extinction Ratio
- Receiver Sensitivity
- BER Curve

2. Reliability and Stability Testing

Subject the transceivers to dramatic changes in temperature on the thermal shock chamber to ensure reliability and stability of the transceivers.

- Commercial: 0 °C to 70 °C
- Extended: -5 °C to 85 °C
- Industrial: -40 °C to 85 °C

3. Transfer Rate and Protocol Testing

Test the actual transfer data rate and the transmission ability under different protocols with Network Master Pro.

- Ethernet
- Fibre Channel
- SDH/SONET
- CPRI

4. Optical Spectrum Evaluation

Evaluate various important parameters with the Optical Spectrum Analyzer to meet the industry standards.

- Center Wavelength, Level
- OSNR
- SMSR
- Spectrum Width

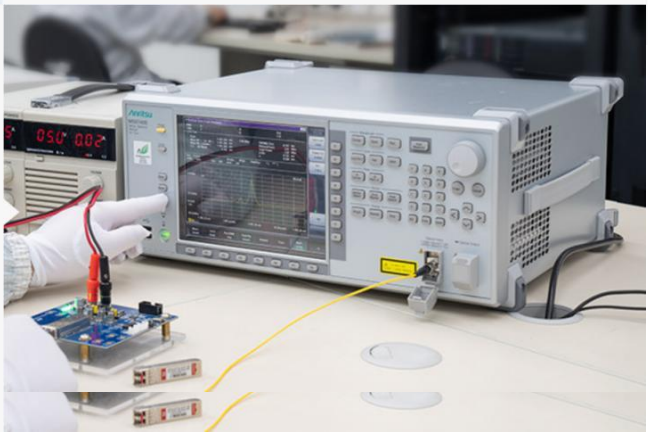

Order Information

Part Number	Description
SFP1G-SX-85-I	SFP, 1000BASE-SX, 850nm, MMF, 550m, LC, -40 to 85℃(IND), DOM
SFP1G-SX-31	SFP, 1000BASE-SX,1310nm, SMF, 2km, LC, 0 to 70℃(COM), DOM
SFP1G-LX-31-I	SFP, 1000BASE-LX,1310nm, SMF, 10km, LC, -40 to 85℃(IND), DOM
SFP1G-LX-31-I	SFP, 1000BASE-LX/LH,1310nm, SMF, 10km, LC, -40 to 85℃(IND), DOM
SFP1G-LX-31-I	SFP, 1000BASE-LX/LH,1310nm, SMF, 20km, LC, -40 to 85℃(IND), DOM
SFP1G-EX-31	SFP, 1000BASE-EX, 1310nm, SMF, 40km, LC, 0 to 70℃(COM), DOM
SFP1G-EX-55	SFP, 1000BASE-EX, 1550nm, SMF, 40km, LC, 0 to 70℃(COM), DOM
SFP1G-ZX-55	SFP, 1000BASE-EX, 1550nm, SMF, 60km, LC, 0 to 70℃(COM), DOM
SFP1G-ZX-55	SFP, 1000BASE-ZX, 1550nm, SMF, 80km, LC, 0 to 70℃(COM), DOM
SFP1G-ZX100-55	SFP, 1000BASE-EZX, 1550nm, SMF, 100km, LC, 0 to 70℃(COM), DOM
SFP1G-ZX120-55	SFP, 1000BASE-EZX, 1550nm, SMF, 120km, LC, 0 to 70℃(COM), DOM
SFP-GEB-T-I	SFP, 10/100/1000Base-T, 0 to 70℃(COM), SERDES/SGMII Interface
SFP-GEB-T-I	SFP, 10/100/1000Base-T, 0 to 70℃(COM), SERDES Interface

Note:

1G SFP transceiver module is individually tested on corresponding equipment such as Cisco, Arista, Juniper, Dell, Brocade and other brands, and passes the monitoring of FS.COM intelligent quality control system.