10GBASE-ELR SFP+ 1310nm 20km DOM Transceiver

SFP-10GELR-31

Application

- 10GBASE-ELR 10G Ethernet
- 10GFC
- 8GFC

Product Function

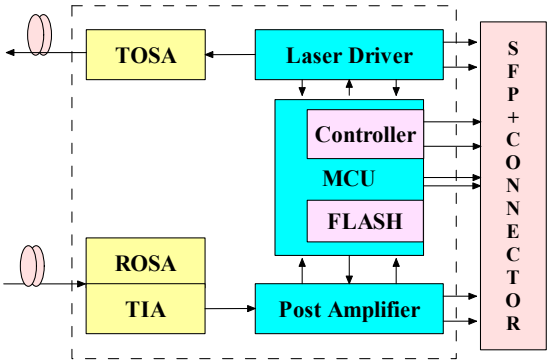

Product Specifications

I. Absolute Maximum Ratings

Parameter	Symbol	Unit	Min	Max
Storage Temperature Range	Ts	℃	-40	85
Relative Humidity	RH	%	0	95
Supply Voltage	VCC	V	-0.3	4.0

II. Recommended Operating Conditions

Parameter	Symbol	Unit	Min	Typ	Max
Operating Case Temperature Range	Tc	℃	0		70
Power Supply Voltage	Vcc	V	3.135	3.3	3.465
Bit Rate	BR	Gb/s	8.5		10.52
Bit Error Ratio	BER				10^{-12}
Max Supported Link Length	L	km			20

III. Electric Ports Definition

Parameter	Symbol	Unit	Min	Typ	Max	Note
Supply Voltage	V_{CC}	V	3.135	3.3	3.465	
Supply Current	Icc	mA			315	
Transmitter						
Input Differential Impedance	RIN	Ω	80	100	120	1
Differential Data Input Swing	VIN	mVp-p	190		700	
Transmit Disable Voltage	VDIS	V	2		V_{CCHOST}	
Transmit Enable Voltage	VEN	V	V_{EE}		V_{EE}+0.8	
Transmit Fault Assert Voltage	VFA	V	2.2		V_{CCHOST}	
Transmit Fault De-Assert Voltage	VFDA	V	V_{EE}		VEE+0.4	
Receiver						
Differential Data Output Swing	VOD	mVp-p	300		850	
LOS Fault	VLOSFT	V	2.2		V_{CCHOST}	
LOS Normal	VLOSNR	V	V_{EE}		VEE+0.4	

Note:

1. Differential between TD+ / TD–

IV. Optical Characteristics

Parameter	Min	Typ	Max	Units	Note
Transmitter					
Nominal Wavelength	1260	1310	1355	nm	
Side Mode Suppression Ratio	30			dB	
Optical Modulation Amplitude	-5.2			dBm	
Optical Output Power	-8.2		0.5	dBm	
Extinction Ratio	3.5			dB	
Transmitter and Dispersion Penalty			3.2	dB	
Average launch power of OFF transmitter			-30	dBm	
Relative Intensity Noise			-128	dB/Hz	
Optical Return Loss Tolerance			12	dB	
Spectral width			1	nm	
Receiver					
Center Wavelength	1260		1355	nm	
Average Receiver Power	-14.4		+0.5	dBm	1
Receiver Sensitivity (OMA)			-12.6	dBm	1
Stressed Receiver Sensitivity (OMA)			-10.3	dBm	2

Max Input power	1.5			dBm	
Receiver Reflectance			-12	dB	
Assert LOS	-30			dBm	
De-Assert LOS			-16	dBm	
LOS Hysteresis	0.5			dB	

Note:

1. Sensitivity for 10G PRBS 2^{31}-1 and BER better than or equal to 10E-12
2. The stressed sensitivity value in the table are for system level BER measurements which include the effects of CDR circuit.

V. Pin function definitions

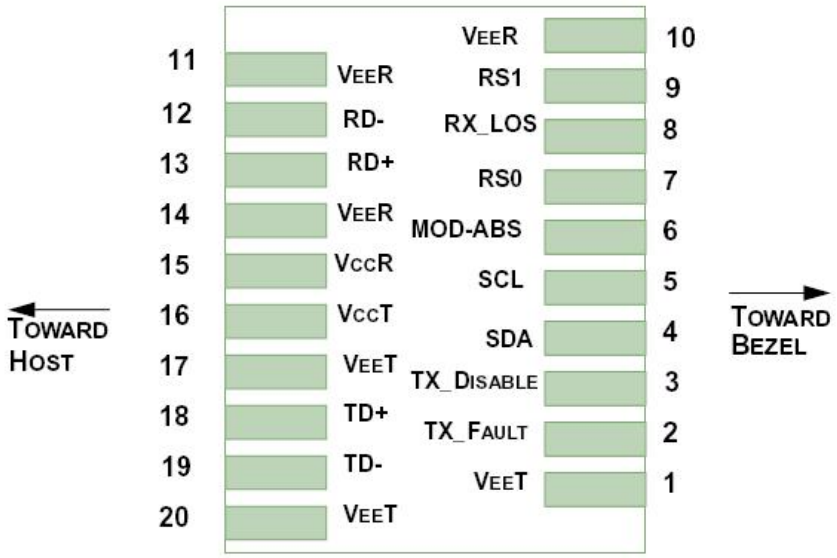

Pin Number	Symbol	Name	Description
1,17,20	VeeT	Transmitter Signal Ground	These pins should be connected to signal ground on the host board.
2	TX Fault	Transmitter Fault Out (OC)	Logic "1" Output = Laser Fault (Laser off before t_fault)Logic "0" Output = Normal OperationThis pin is open collector compatible, and should be pulled up to Host Vcc with a 10kΩ resistor.
3	TX Disable	Transmitter Disable In (LVTTL)	Logic "1" Input (or no connection) = Laser offLogic "0" Input = Laser onThis pin is internally pulled up to VccT with a 10 kΩ resistor.
4	SDA	Module Definition Identifiers	Serial ID with SFF 8472 Diagnostics
5	SCL		Module Definition pins should be pulled up
6	MOD-ABS		to Host Vcc with 10 kΩ resistors.
7	RS0	Receiver Rate Select (LVTTL)	These pins have an internal 33kΩ pull-down
9	RS1	Transmitter Rate Select (LVTTL)	to ground. A signal on either of these pins will not affect module performance.
8	LOS	Loss of Signal Out (OC)	Sufficient optical signal for potentialBER < $1x10^{-12}$= Logic "0"Insufficient optical signal for potential BER < $1x10^{-12}$= Logic "1"This pin is open collector compatible, and should be pulled up to Host Vcc with a 10kΩ resistor.
10,11,14	VeeR	Receiver Signal Ground	These pins should be connected to signal ground on the host board.
12	RD-	Receiver Negative DATA Out(CML)	Light on = Logic "0" Output Receiver DATA output is internally AC coupled and series terminated with a 50Ω resistor.

13	RD+	Receiver Positive DATA Out(CML)	Light on = Logic "1" Output Receiver DATA output is internally AC coupled and series terminated with a 50Ω resistor.
15	VccR	Receiver Power Supply	This pin should be connected to a filtered +3.3V power supply on the host board. See Figure 3.Recommended power supply filter
16	VccT	Transmitter Power Supply	This pin should be connected to a filtered +3.3V power supply on the host board. See Figure 3.Recommended power supply filter
18	TD+	Transmitter Positive DATA In(CML)	Logic "1" Input = Light on Transmitter DATA inputs are internally AC coupled and terminated with a differential 100Ω resistor.
19	TD-	Transmitter Negative DATA In(CML)	Logic "0" Input = Light on Transmitter DATA inputs are internally AC coupled and terminated with a differential 100Ω resistor.

VI. ENVIRONMENTAL SAFETY

Compliant to ROHS6

VII. DIGITAL DIAGNOSTIC INTERFACE DEFINITION

The 2-wire serial interface addresses of the SFP+ module are 1010000x (A0h) and 1010001x (A2h).

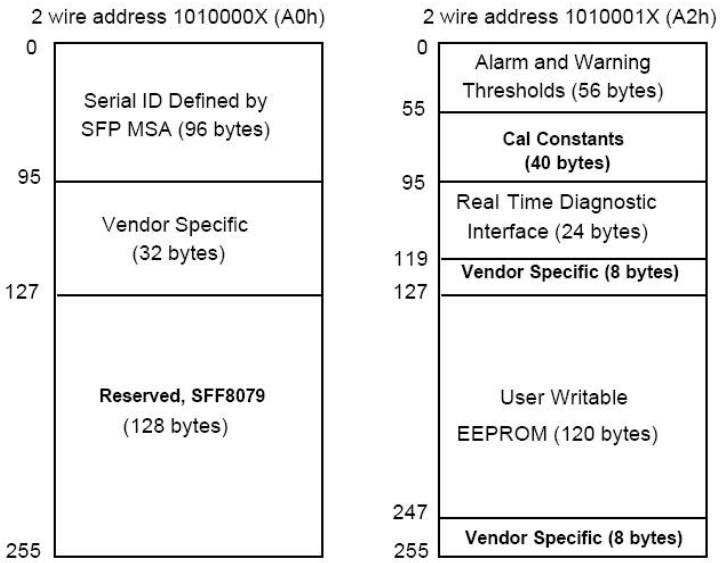

VIII. TYPICAL APPLICATION CIRCUIT

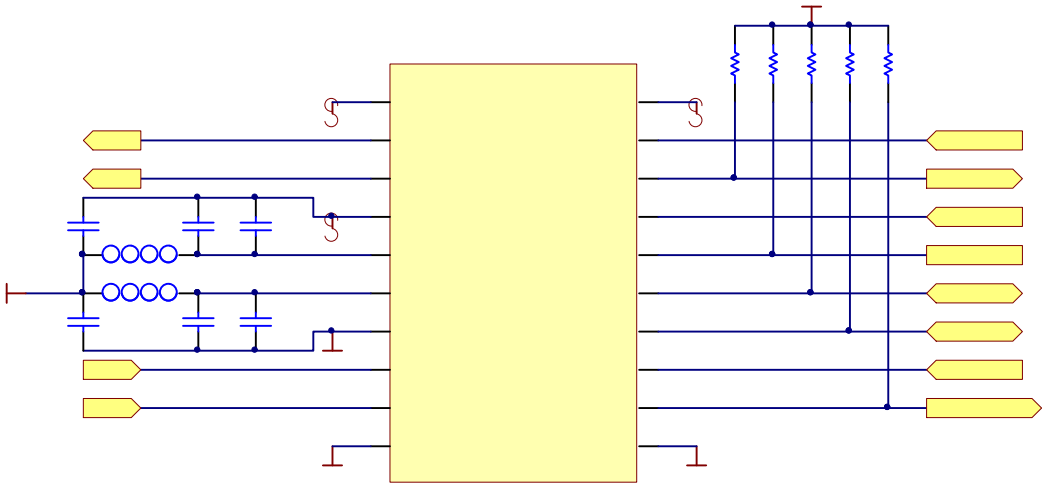

IX. MECHANICAL DRAWINGS

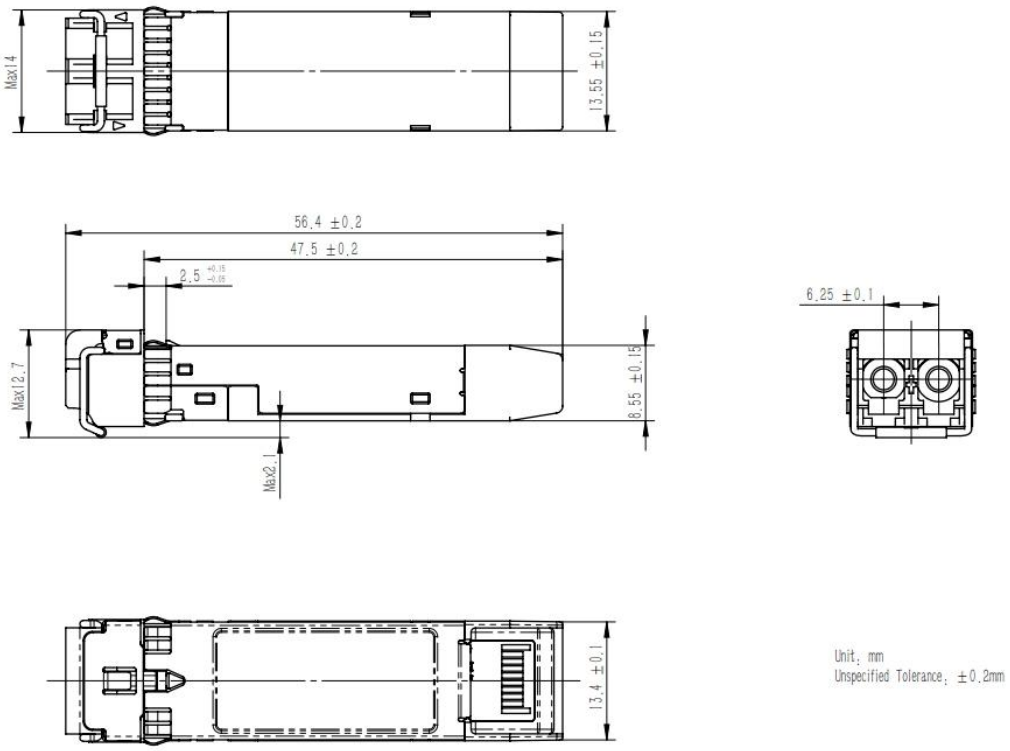

Test Center

FS.COM transceivers are tested to ensure connectivity and compatibility in our test center before shipped out. FS.COM test center is supported by a variety of mainstream original brand switches and groups of professional staff, helping our customers make the most efficient use of our products in their systems, network designs and deployments.

The original switches could be found nowhere but at FS.COM test center, eg: Juniper MX960 & EX 4300 series, Cisco Nexus 9396PX & Cisco ASR 9000 Series, HP 5900 Series & HP 5406R ZL2 V3(J9996A), Arista 7050S-64, Brocade ICX7750-26Q & ICX6610-48, Avaya VSP 7000 MDA 2, etc.

Cisco ASR 9000 Series(A9K-MPA-1X40GE)

ARISTA 7050S-64(DCS-7050S-64)

Juniper MX960

Brocade ICX 7750-26Q

Extreme Networks X670V VIM-40G4X

Mellanox M3601Q

Dell N4032F

HP 5406R ZL2 V3(J9996A)

AVAYA 7024XLS(7002QQ-MDA)

Test Assured Program

FS.COM truly understands the value of compatibility and interoperability to each optics. Every module FS.COM provides must run through programming and an extensive series of platform diagnostic tests to prove its performance and compatibility. In our test center, we care of every detail from staff to facilities—professionally trained staff, advanced test facilities and comprehensive original-brand switches, to ensure our customers to receive the optics with superior quality.

Our smart data system allows effective product management and quality control according to the unique serial number, properly tracing the order, shipment and every part.

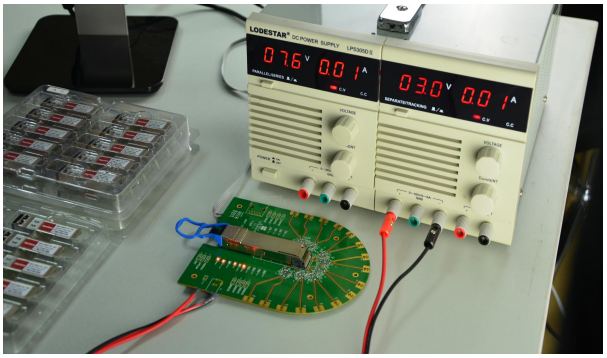

Our in-house coding facility programs all of our parts to standard OEM specs for compatibility on all major vendors and systems such as Cisco, Juniper, Brocade, HP, Dell, Arista and so on.

With a comprehensive line of original-brand switches, we can recreate an environment and test each optics in practical application to ensure quality and distance.

The last test assured step to ensure our products to be shipped with perfect package.

Order Information

Part No.	Package	Data rate(Gb/s)	Laser	Optical Power (OMA)dBm	Detector	Sensitivity (OMA) dBm	Top	Reach (km)	Other	Application
10G ELR	SFP+	8.5 ~10.52	1310nm DFB	-8.2 ~+0.5	PIN	< -12.6	0~70 ℃	20km	DDM	10GBASE-ELR 8G/10GFC