OC-3/STM-1 IR-1 SFP 1310nm 15km DOM Transceiver

SDH-SFP-OC3-IR1

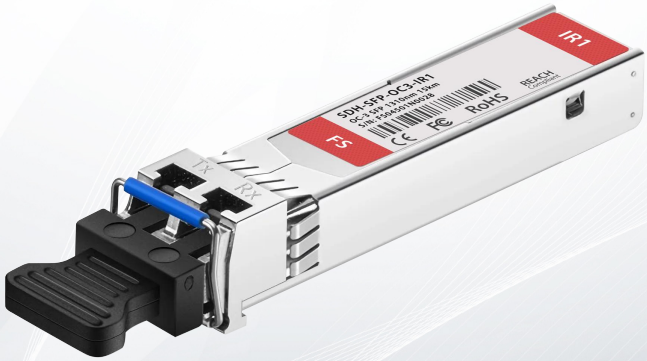

Application

- SONET OC-3/SDH STM-1
- Fast Ethernet
- Other Optical Links

Features

- Up to 155Mb/s Data Links
- Hot-Pluggable
- Duplex LC Connector
- Up to 15km on 9/125μm SMF
- 1310nm FP Laser Transmitter
- Single +3.3V Power Supply Compliant
- Monitoring Interface Compliant with SFF-8472
- Maximum Power <1W
- Commercial Temperature Range: 0~+70℃
- RoHS Compliant and Lead Free

Description

The SDH-SFP-OC3-LR1 series transceivers is a high performance, cost effective module which has a duplex LC optics interface.
Standard AC coupled CML for high speed signal and LVTTL control and monitor signals.
The receiver section uses a PIN receiver and the transmitter uses a 1310nm FP laser,
up to 19dB link budge ensure this module SONET OC-3/SDH STM-1 15Km application.

Product Specifications

I. Absolute Maximum Ratings

Data Rate Specifications	Symbol	Min	Max	Units
Storage Temperature	Ts	-40	+85	℃
Supply Voltage	Vcc	-0.5	4	V
Operating Relative Humidity	RH	0	85	%

II. Recommended Operating Environment:

Data Rate Specifications	Symbol	Min	Max	Units
Commercial Operating Case Temperature	Tc	0	+70	℃
Supply Voltage	Vcc	3.135	3.465	V
Supply Current	Icc		300	mA
Inrush Current	Isurge		Icc+30	mA
Maximum Power	Pmax		1	W

III. Optical and Electrical Characteristics(TOP = 0 to 75° C, VCC = 3.135 to 3.465 Volts)

Parameter	Symbol	Min	Typ.	Max	Unit	Note
Transmitter						
Input Differential impedance	Rin	90	100	110		
Single Ended Data input Swing	Vin PP	250		1200	mVp-p	
Transmit Disable Voltage	VD	Vcc – 1.3		Vcc	V	2
Transmit Enable Voltage	VEN	Vee		Vee+ 0.8	V	
Transmit Disable Assert Time	Tdessert			10	us	
Receiver						
Single Ended Data Output Swing	Vout, pp	300		800	mv	3
Data Output Rise Time	tr			500	ps	4
Data Output Fall Time	tf			500	ps	4
LOS Fault	Vlosfault	Vcc – 0.5		Vcc_host	V	5
LOS Normal	Vlos norm	Vee		Vee+0.5	V	5
Power Supply Rejection	PSR	100			mVpp	6

Notes:

1. AC coupled.
2. Or open circuit.
3. Into 100 ohm differential termination.
4. 20 – 80 %
5. LOS is LVTTL. Logic 0 indicates normal operation; logic 1 indicates no signal detected.
6. All transceiver specifications are compliant with a power supply sinusoidal modulation of 20 Hz to 1.5MHz up to specified value applied through the power supply filtering network shown on page 23 of the Small Form-factor Pluggable (SFP) Transceiver Multi-Source Agreement (MSA), September 14, 2000.

IV. Optical Parameters (TOP = 0 to 75° C, VCC = 3.135 to 3.465 Volts)

Parameter	Symbol	Min	Typ.	Max	Unit	Note
Transmitter						
Center Wavelength	λc	1260	1310	1360	nm	
Spectral Width	σ			7.7	nm	
Optical Output Power	Pout	-15		-8	dBm	1
Optical Rise/Fall Time	tr / tf			500	ps	2
Extinction Ratio	ER	8.2			dB	
Generated Jitter (peak to peak)	JTXp-p			0.07	UI	3
Generated Jitter (rms)	JTXrms			0.07	UI	3
Eye Mask for Optical Output	Compliant with G.957(class 1 laser safety)					
Receiver						
Optical Input Wavelength	λc	1260		1600	nm	
Receiver Overload	PoI	-8			dBm	4
RX Sensitivity	Sen			-34	dBm	4
RX_LOS Assert	LOS A	-45			dBm	
RX_LOS De-assert	LOS D			-35	dBm	
RX_LOS Hysteresis	LOS H	0.5			dB	

General Specifications

Data Rate	BR		155		Mb/s	
Bit Error Rate	BER			10-12		
Max. Supported Link Length on 9/125μm SMF@155Mb/s	LMAX		20		km	
Total System Budget	LB	19			dB	

Notes:

1. The optical power is launched into SMF.
2. 20-80%.
3. Jitter measurements taken using Agilent OMNIBERT 718 in accordance with GR-253.
4. Measured with PRBS 27-1 at 10-12 BER

V. Pin Assignment

Diagram of Host Board Connector Block Pin Numbers and Name

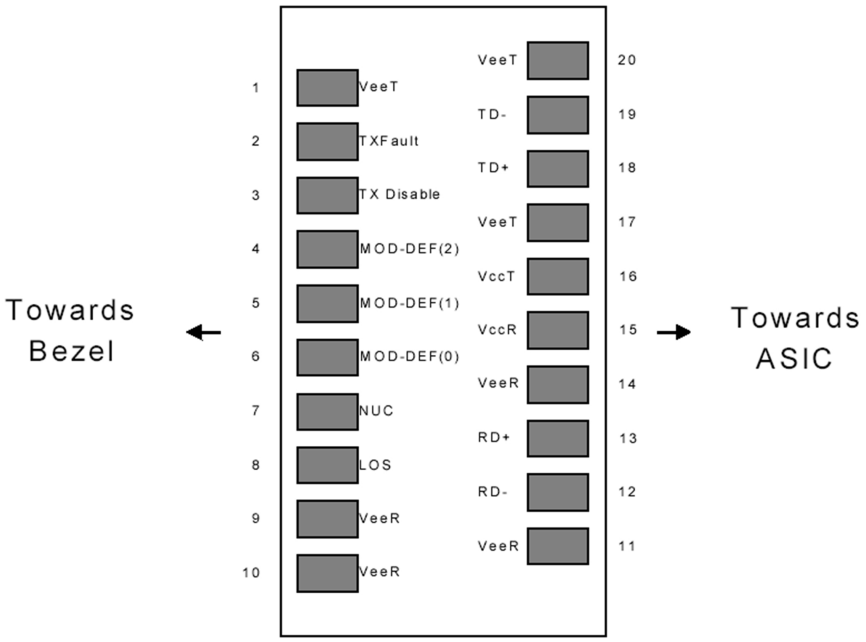

Pin Num.	Name	Function	Plug Seq.	Notes
1	VeeT	Transmitter Ground	1	1
2	TX Fault	Transmitter Fault Indication	3	
3	TX Disable	Transmitter Disable	3	2
4	MOD-DEF2	Module Definition	2	3
5	MOD-DEF1	Module Definition 1	3	3
6	MOD-DEF0	Module Definition 0	3	3
7	Rate Select	Not Connect	3	4
8	LOS	Loss of Signal	3	5
9	VeeR	Receiver Ground	1	1
10	VeeR	Receiver Ground	1	1
11	VeeR	Receiver Ground		1
12	RD-	Inv. Received Data Out	3	6
13	RD+	Received Data Out	3	6
14	VeeR	Receiver Ground	3	1
15	VccR	Receiver Power	2	
16	VccT	Transmitter Power	2	
17	VeeT	Transmitter Ground	1	
18	TD+	Transmit Data In	3	6
19	TD-	Inv. Transmit Data In	3	6
20	VeeT	Transmitter Ground	1	

Notes:

1. Circuit ground is internally isolated from chassis ground.
2. Laser output disabled on TDIS >2.0V or open, enabled on TDIS <0.8V.
3. Should be pulled up with 4.7k - 10 kohms on host board to a voltage between 2.0V and 3.6V. MOD_DEF(0) pulls line low to indicate module is plugged in.
4. Rate select is not used
5. LOS is open collector output. Should be pulled up with 4.7k – 10 kohms on host board to a voltage between 2.0V and 3.6V. Logic 0 indicates normal operation; logic 1 indicates loss of signal.
6. AC Coupled

VI. SFP Module EEPROM Information and Management

The SFP modules implement the 2-wire serial communication protocol as defined in the SFP -8472. The serial ID information of the SFP modules and Digital Diagnostic Monitor parameters can be accessed through the I2C interface at address A0h and A2h. The memory is mapped in Table 1. Detailed ID information (A0h) is listed in Table 2. And the DDM specification at address A2h. For more details of the memory map and byte definitions, please refer to the SFF-8472, "Digital Diagnostic Monitoring Interface for Optical Transceivers". The DDM parameters have been internally calibrated.

Table 1. Digital Diagnostic Memory Map (Specific Data Field Descriptions)

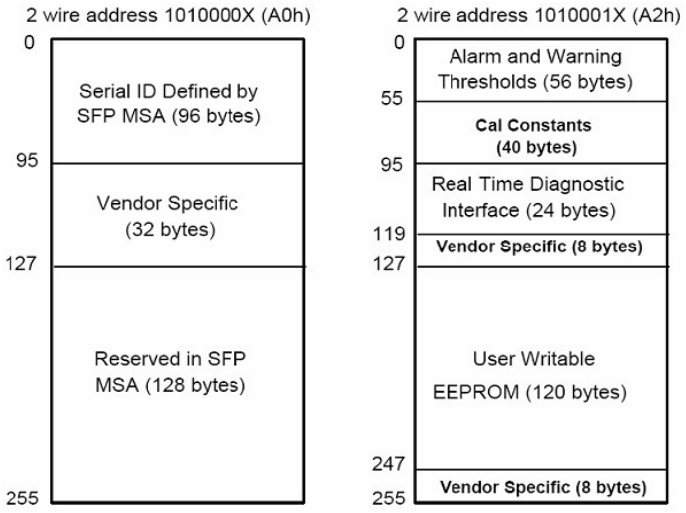

Table 2. EEPROM Serial ID Memory Contents (A0h)

Data Address	Length (Byte)	Name of Length	Description and Contents
		Base ID Fields	
0	1	Identifier	Type of Serial transceiver (03h=SFP)
1	1	Reserved	Extended identifier of type serial transceiver (04h)
2	1	Connector	Code of optical connector type (07=LC)
3-10	8	Transceiver	
11	1	Encoding	NRZ(03h)
12	1	BR, Nominal	Nominal baud rate, unit of 100Mbps
13-14	2	Reserved	(0000h)
15	1	Length(9um)	Link length supported for 9/125um fiber, units of 100m
16	1	Length(50um)	Link length supported for 50/125um fiber, units of 10m
17	1	Length(62.5um)	Link length supported for 62.5/125um fiber, units of 10m
18	1	Length(Copper)	Link length supported for copper, units of meters
19	1	Reserved	
20-35	16	Vendor Name	SFP vendor name: TIBTRONIX
36	1	Reserved	
37-39	3	Vendor OUI	SFP transceiver vendor OUI ID
40-55	16	Vendor PN	Part Number: “TSPL1E20D” (ASCII)
56-59	4	Vendor rev	Revision level for part number
60-62	3	Reserved	
63	1	CCID	Least significant byte of sum of data in address 0-62

Data Address	Length (Byte)	Name of Length	Description and Contents
		Extended ID Fields	
64-65	2	Option	Indicates which optical SFP signals are implemented(001Ah = LOS, TX_FAULT, TX_DISABLE all supported)
66	1	BR, max	Upper bit rate margin, units of %
67	1	BR, min	Lower bit rate margin, units of %
68-83	16	Vendor SN	Serial number (ASCII)
84-91	8	Date code	TIBTRONIX's Manufacturing date code
92-94	3	Reserved	
95	1	CCEX	Check code for the extended ID Fields (addresses 64 to 94)
		Vendor Specific ID Fields	
96-127	32	Readable	TIBTRONIX specific date, read only
128-255	128	Reserved	Reserved for SFF-8079

VII. Digital Diagnostic Monitor Characteristics

Data Address	Parameter	Accuracy	Unit
96-97	Transceiver Internal Temperature	±3.0	℃
98-99	VCC3 Internal Supply Voltage	±3.0	%
100-101	Laser Bias Current	±10	%
102-103	Tx Output Power	±3.0	dB
104-105	Rx Input Power	±3.0	dB

VIII. Regulatory Compliance

The TSPL1E20D complies with international Electromagnetic Compatibility (EMC) and international safety requirements and standards (see details in Table following).

Electrostatic Discharge(ESD) to the Electrical Pins	MIL-STD-883EMethod 3015.7	Class 1(>1000 V)
Electrostatic Discharge (ESD)to the Duplex LC Receptacle	IEC 61000-4-2GR-1089-CORE	Compatible with standards
ElectromagneticInterference (EMI)	FCC Part 15 Class BEN55022 Class B (CISPR 22B)VCCI Class B	Compatible with standards
Laser Eye Safety	FDA 21CFR 1040.10 and 1040.11EN60950, EN (IEC) 60825-1,2	Compatible with Class 1 laserproduct.

IX. Recommended Circuit

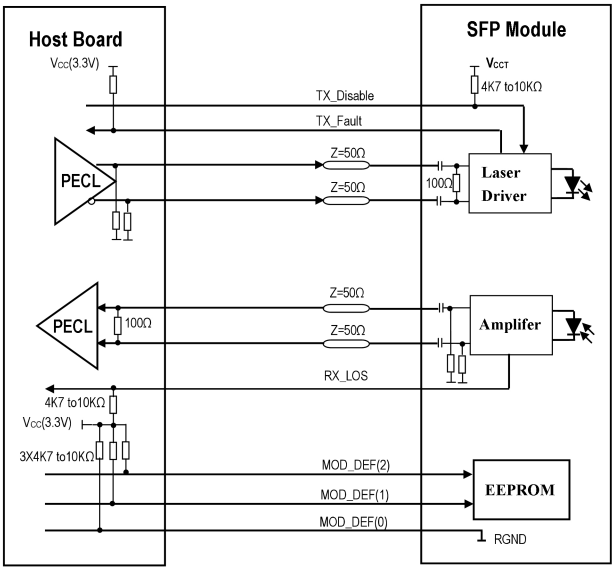

X. Mechanical Specifications

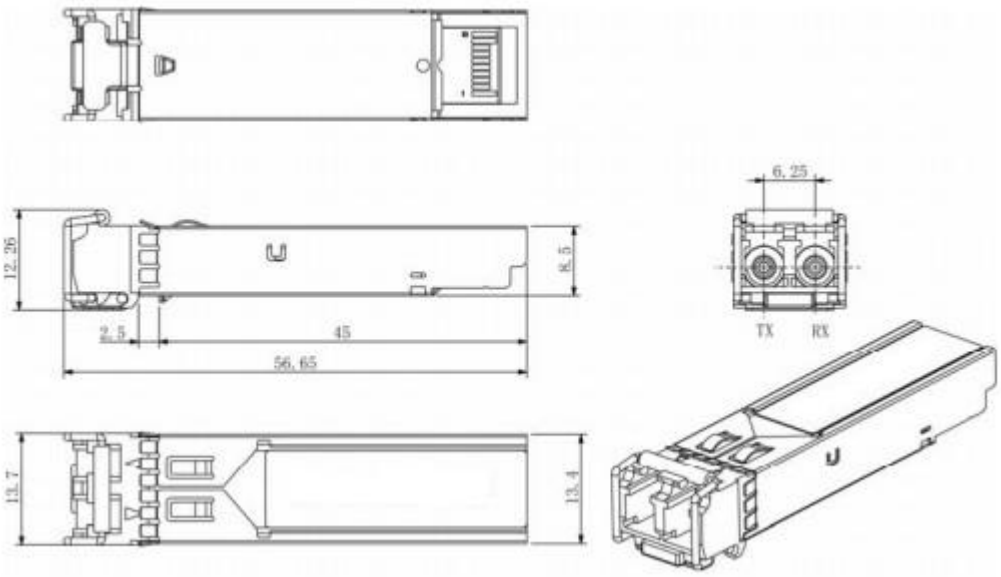

Test Center

FS.COM transceivers are tested to ensure connectivity and compatibility in our test center before shipped out. FS.COM test center is supported by a variety of mainstream original brand switches and groups of professional staff, helping our customers make the most efficient use of our products in their systems, network designs and deployments.

The original switches could be found nowhere but at FS.COM test center, eg: Juniper MX960 & EX 4300 series, Cisco Nexus 9396PX & Cisco ASR 9000 Series, HP 5900 Series & HP 5406R ZL2 V3(J9996A), Arista 7050S-64, Brocade ICX7750-26Q & ICX6610-48, Avaya VSP 7000 MDA 2, etc.

Cisco ASR 9000 Series(A9K-MPA-1X40GE)

ARISTA 7050S-64(DCS-7050S-64)

Juniper MX960

Brocade ICX 7750-26Q

Extreme Networks X670V VIM-40G4X

Mellanox M3601Q

Dell N4032F

HP 5406R ZL2 V3(J9996A)

AVAYA 7024XLS(7002QQ-MDA)

Test Assured Program

FS.COM truly understands the value of compatibility and interoperability to each optics. Every module FS.COM provides must run through programming and an extensive series of platform diagnostic tests to prove its performance and compatibility. In our test center, we care of every detail from staff to facilities—professionally trained staff, advanced test facilities and comprehensive original-brand switches, to ensure our customers to receive the optics with superior quality.

Our smart data system allows effective product management and quality control according to the unique serial number, properly tracing the order, shipment and every part.

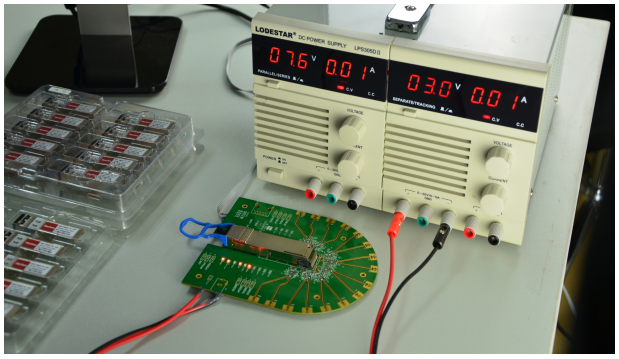

Our in-house coding facility programs all of our parts to standard OEM specs for compatibility on all major vendors and systems such as Cisco, Juniper, Brocade, HP, Dell, Arista and so on.

With a comprehensive line of original-brand switches, we can recreate an environment and test each optics in practical application to ensure quality and distance.

The last test assured step to ensure our products to be shipped with perfect package.