100GBASE-BX20 QSFP28 1280nm-TX/1310nm-RX 20km DOM Transceiver

QSFP-BX20-100G

Application

- Ethernet Links
- 100G 4WDM-20 applications with FEC

Features

- Hot pluggable QSFP28 MSA form factor
- Supports 103.1Gb/s aggregate bit rate
- Up to 20km reach for G.652 SMF [with RS(528,514) FEC]
- Single +3.3V power supply
- Extended case temperature range of -20℃ to 85℃
- Cooled 4x25Gb/s LAN WDM Blue or Red Side TOSA, LAN WDM Red or Blue Side ROSA
- Maximum power consumption 5W
- Single LC receptacle
- Compliant with the QSFP28 and 4WDM-20 MSA
- Compatible with RoHS2.0
- DDM function

Product Specifications

I. Absolute Maximum Ratings

Parameter	Symbol	Unit	Min	Max
Transportation and Storage Temperature Range	Ts	℃	-40	85
Transportation and Storage Relative Humidity	RH	%	5	95
Power Supply Voltage	Vcc	V	-0.3	+3.6
Case Temperature Range when module is powered on Ready State	Tc	℃	-20	85
Mean Receiver Damage Threshold Per Lane	P_{dag}	dBm		+6.0
ESD(HBM)		V		1000

II. Recommended Operating Conditions

Parameter	Symbol	Unit	Min	Typ	Max
Operating Case Temperature Range	Tc	℃	-20		85
Relative Humidity	RH	%	0		90
Power Supply Voltage	Vcc	V	3.135	3.3	3.465
Total Power Consumption	Pw	W			5.5
Data rate(each line)		Gb/s		25.78125	-

III. Voltage Supply Electrical Characteristics

Parameter	Symbol	Unit	Min	Typ	Max	Notes
Steady State Supply Current	Icc	mA			1443.0	
Sustained peak current	I_{SP}	mA			1650	
Instantaneous peak current	I_{IP}	90			2000	
Power Dissipation	Pw	W			5.5	
Low Power Dissipation	Plow	W			1.5	

IV. Different Signal Electrical Characteristics

Parameter	Symbol	Unit	Min	Typ	Max	Notes
Transmitter (CEI-28G-VSR)						
Differential voltage pk-pk		mV			900	
Common mode noise (rms)		mV			17.5	
Eye height		mV	95			
Eye width		Ui	0.46			
Differential termination mismatch		%			10	
Transition time		ps	10			20/80%
Common mode voltage		V	-0.3		2.8	

Receiver(CEI-28G-VSR)

Differential voltage pk-pk		mV			900	
Common mode noise (rms)		mV			17.5	
Eye height		mV	228			
Eye width		Ui	0.57			
Differential termination mismatch		%			10	
Transition time		ps	9.5			20/80%
Vertical eye closure		dB			5.5	

V. 3.3V LVTTL Electrical Characteristics

Parameter	Symbol	Unit	Min	Typ	Max	Notes
Input High Voltage	VIH	V	2.0		Vcc+0.3	
Input Low Voltage	VIL	V	-0.3		0.8	VIL
Input Leakage Current	IIN	uA	-10		+10	IIN
Output High Voltage (IOH=100uA)	VOH	V	Vcc-0.5		Vcc+0.3	VOH
Output Low Voltage (IOL=100uA)	VOL	V	0		0.4	VOL

VI. 3V LVCMOS Electrical Characteristics

Parameter	Symbol	Unit	Min	Typ	Max	Notes
Input High Voltage	VIH	V	Vcc*0.7		Vcc+0.5	
Input Low Voltage	VIL	V	-0.3		Vcc*0.3	
Output High Voltage (IOH=100uA)	VOH	V	Vcc-0.5		Vcc+0.3	
Output Low Voltage (IOL=100uA)	VOL	V	0		0.4	
I/O Pin Capacitance	Ci	pF			14	

VII. OPTIC SPECIFICATION

Parameter	Symbol	Unit	Min	Typ	Max	Notes
Optical transmitter Characteristics						
Signaling Rate for Each Lane		Gbps		25.78125		
Signaling Speed Accuracy		ppm	-100		+100	
Blue Side Four Lane Wavelength Range	λ1	nm	1272.55	1273.55	1274.54	
	λ2		1276.89	1277.89	1278.89	
	λ3		1281.25	1282.26	1283.27	
	λ4		1285.65	1286.66	1287.68	
Red Side Four Lane Wavelength Range	λ5	nm	1294.53	1295.56	1296.59	
	λ6		1299.02	1300.05	1301.09	
	λ7		1303.54	1304.58	1305.63	
	λ8		1308.09	1309.14	1310.19	

Side Mode Suppression Ratio (min)	SMSR		30			
Total Average Launch Power	Pt	dBm			10.5	
Average Launch Power for Each Lane	Pa	dBm	-4.3		+4.5	1
Optical Modulation Amplitude for Each Lane	OMA	dBm	-1.3		4.5	2
Launch power in OMA minus TDP, per Lane(min)		dB	-2.3			
Difference in launch power between any two lanes (OMA) (max)		dB			5.0	
Transmitter and Dispersion Penalty for Each Lanes	TDP	dB			2.8	4
Average Launch Power of Off Transmitter for Each Lanes	Poff	dBm			-30	
Extinction Ratio	EX	dB	4			
Optical Return Loss Tolerance		dB			20	
Transmitter Reflectance		dB			-26	3
Eye Diagram	{0.25, 0.4, 0.45, 0.25, 0.28, 0.4}					5
Eye mask margin	≥10%					

Optical path&Power budget

Power budget (for max TDP)		dB			13	
Operating distance		km	20			
Channel insertion loss		dB	0		10.2	
Maximum discrete reflectance		dB			-26	

Allocation for penalties (for max TDP)		dB			2.8	
Dispersion @Blue side Neg		ps/nm	-102		-70	
Dispersion @Blue side Pos		ps/nm	-53		-23	
Dispersion @Red side Neg		ps/nm	-53		-26	
Dispersion @Red side Pos		ps/nm	-10		19	
Optical receiver Characteristics						
Receive Rate for Each Lane	Gbps			25.78125		
Signaling Speed Accuracy	ppm		-100		+100	
Red Side Four Lane Wavelength Range	λ5	nm	1294.53	1295.56	1296.59	
	λ6		1299.02	1300.05	1301.09	
	λ7		1303.54	1304.58	1305.63	
	λ8		1308.09	1309.14	1310.19	
Blue Side Four Lane Wavelength Range	λ1	nm	1272.55	1273.55	1274.54	
	λ2		1276.89	1277.89	1278.89	
	λ3		1281.25	1282.26	1283.27	
	λ4		1285.65	1286.66	1287.68	
Overload Input Optical Power	Pmax	dBm	5.5			6
Average Receive Power for Each Lane	Pin	-14.5			4.5	7
Receive Power In OMA for Each Lane	PinOMA	dBm			4.5	
Receiver reflectance		dB			-26	

Receiver Sensitivity in OMA for Each Lane(100GbE) at BER= 5x10–5 BER	S_{OMA}	dBm			-12.5	8
Stressed Receiver Sensitivity in OMA for Each Lane		dBm			-10.0	9
RX Los Assert level	The assert level occurs for the RX input power to a lane corresponding to an equivalent BER of 1E-2 to 1E-4					
Los Hysteresis		dBm	0.5			

Note:

1. Average launch power, each lane (min) is informative and not the principal indicator of signal strength. A transmitter with launch power below this value cannot be compliant; however, a value above this does not ensure compliance.
2. Even if the TDP<1dB, the OMA (min) must exceed this value.
3. Transmitter reflectance is defined looking into the transmitter.
4. TDP does not include a penalty for multi-path interference (MPI).
5. Eye mask hit ratio is 5E-5.
6. The receiver shall be able to tolerate, without damage, continuous exposure to an optical input signal having this average power level.
7. Average receive power, each lane (min) is informative and not the principal indicator of signal strength. A received power below this value cannot be compliant; however, a value above this does not ensure compliance.
8. Receiver sensitivity (OMA), each lane (max) at 5 x 10-5 BER is a normative specification.
9. Measured with conformance test signal at TP3 (Refer to IEEE Std 802.3™-2015 Cl. 88.8.10) for BER = 5x10-5.

VIII. HARDWARE CHARACTERS

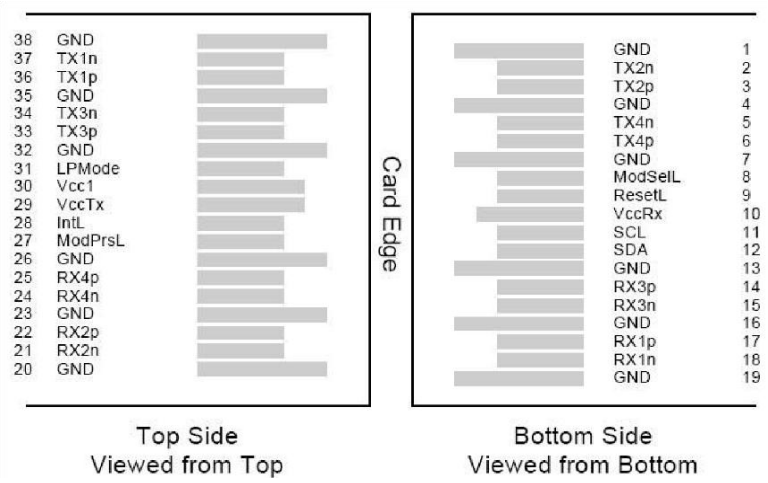

PIN	DEFINITION	DESCRIPTION	NOTE
1	GND	Ground	1
2	Tx2n	TransmitterInvertedDataInput	
3	Tx2p	TransmitterNon-InvertedDataInput	
4	GND	Ground	1
5	Tx4n	TransmitterInvertedDataInput	
6	Tx4p	TransmitterNon-InvertedDataInput	
7	GND	Ground	1
8	ModSelL	ModuleSelect	
9	ResetL	ModuleReset	
10	VccRx	+3.3VPowerSupplyReceiver	2
11	SCL	2-WireSerialInterfaceClock	
12	SDA	2-WireSerialInterfaceData	

14	Rx3p	ReceiverNon-InvertedDataOutput	
15	Rx3n	ReceiverInvertedDataOutput	
16	GND	Ground	1
17	Rx1p	ReceiverNon-InvertedDataOutput	
18	Rx1n	ReceiverInvertedDataOutput	
19	GND	Ground	1
20	GND	Ground	1
21	Rx2n	ReceiverInvertedDataOutput	
22	Rx2p	ReceiverNon-InvertedDataOutput	
23	GND	Ground	1
24	Rx4n	ReceiverInvertedDataOutput	
25	Rx4p	ReceiverNon-InvertedDataOutput	
26	GND	Ground	1
27	ModPrsL	ModulePresent	
28	IntL/RxLosL	Interrupt.OptionallyconfigurableasRxLOSLviathemanagementinterface(SFF-8636).	
29	VccTx	+3.3VPowerSupplytransmitter	2
30	Vcc1	+3.3VPowerSupply	2
31	LPMode	LowPowerMode.OptionallyconfigurableasTxDisviathemanagementinterface(SFF-8636).	
32	GND	Ground	1
33	Tx3p	TransmitterNon-InvertedDataInput	

35	GND	Ground	1
36	Tx1p	TransmitterNon-InvertedDataInput	
37	Tx1n	TransmitterInvertedDataInput	
38	GND	Ground	1

Note:

1. GND is the symbol for signal and supply (power) common for the QSFP28 module. All are common within the module and all module voltages are referenced to this potential unless otherwise noted. Connect these directly to the host board signal common ground plane.
2. VccRx, Vcc1 and VccTx are the receiving and transmission power suppliers and shall be applied concurrently. Recommended host board power supply filtering is shown in Figure 3 below. Vcc Rx, Vcc1 and Vcc Tx may be internally connected within the module in any combination. The connector pins are each rated for a maximum current of 1000mA.

IX. DDM accuracy

Parameters	Unit	Requirements	Note
Temperature	℃	+/-3	
Voltage	V	+/-5%	
Rx power	dB	+/-3.0	
Tx power	dB	+/-3.0	

X. DDM Alarm & warning threshold is listed below

Parameters	Unit	Requirements	Description
Temp low warning	℃	-40	Min.casetemperature
Temp high warning	℃	85	Max.casetemperature
Voltage low warning	V	3.135	-5%Vcctarget
Voltage high warning	V	3.465	+5%Vcctarget
Tx power low warning	dBm	-4.3	
Tx power high warning	dBm	4.5	
Rx power low warning	dBm	-12.7	
Rx powe rhigh warning	dBm	4.5	
Temp low alarm	℃	-43	
Temp high alarm	℃	88	
Voltage low alarm	V	3.041	
Voltage high alarm	V	3.569	
Tx power low alarm	dBm	-6.3	
Tx power high alarm	dBm	6.5	
Rx power low alarm	dBm	-14.7	
Rx power high alarm	dBm	6.5	

XI. RECOMMEND CIRCUIT

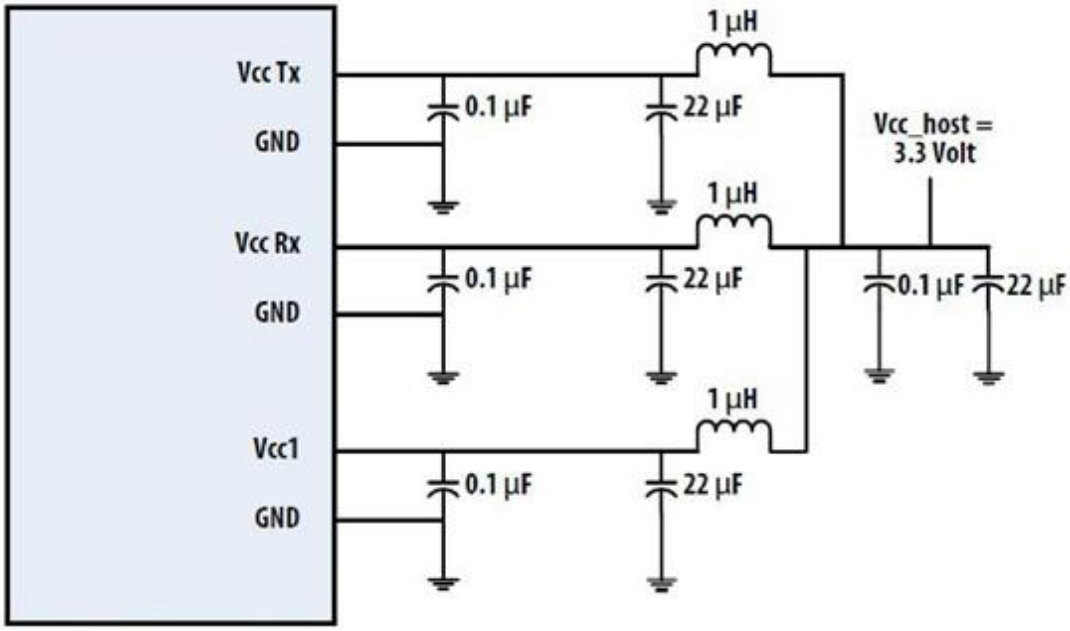

XII. MECHANICAL DRAWINGS

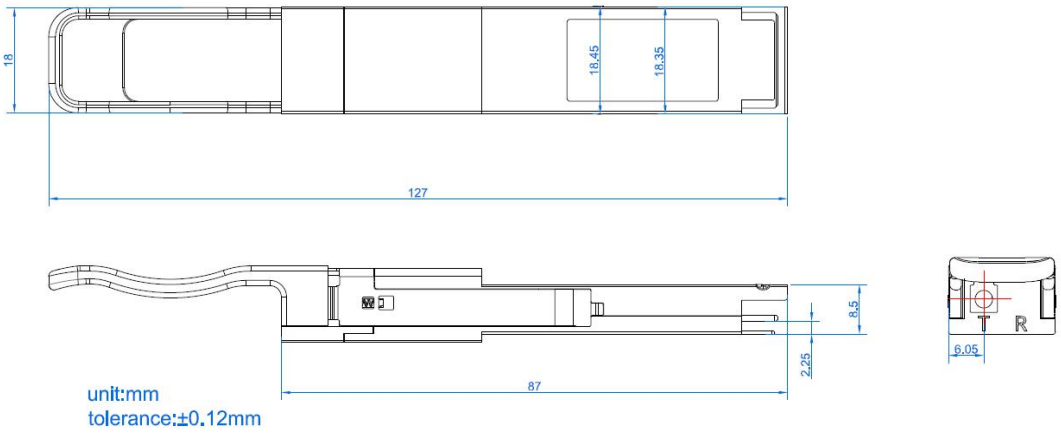

Test Center

FS.COM transceivers are tested to ensure connectivity and compatibility in our test center before shipped out. FS.COM test center is supported by a variety of mainstream original brand switches and groups of professional staff, helping our customers make the most efficient use of our products in their systems, network designs and deployments.

The original switches could be found nowhere but at FS.COM test center, eg: Juniper MX960 & EX 4300 series, Cisco Nexus 9396PX & Cisco ASR 9000 Series, HP 5900 Series & HP 5406R ZL2 V3(J9996A), Arista 7050S-64, Brocade ICX7750-26Q & ICX6610-48, Avaya VSP 7000 MDA 2, etc.

Cisco ASR 9000 Series(A9K-MPA-1X40GE)

ARISTA 7050S-64(DCS-7050S-64)

Juniper MX960

Brocade ICX 7750-26Q

Extreme Networks X670V VIM-40G4X

Mellanox M3601Q

Dell N4032F

HP 5406R ZL2 V3(J9996A)

AVAYA 7024XLS(7002QQ-MDA)

Test Assured Program

FS.COM truly understands the value of compatibility and interoperability to each optics. Every module FS.COM provides must run through programming and an extensive series of platform diagnostic tests to prove its performance and compatibility. In our test center, we care of every detail from staff to facilities—professionally trained staff, advanced test facilities and comprehensive original-brand switches, to ensure our customers to receive the optics with superior quality.

Our smart data system allows effective product management and quality control according to the unique serial number, properly tracing the order, shipment and every part.

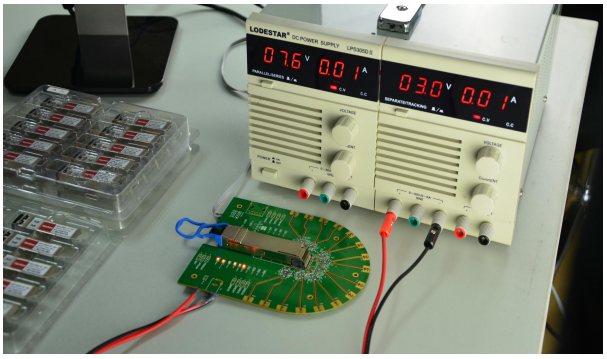

Our in-house coding facility programs all of our parts to standard OEM specs for compatibility on all major vendors and systems such as Cisco, Juniper, Brocade, HP, Dell, Arista and so on.

With a comprehensive line of original-brand switches, we can recreate an environment and test each optics in practical application to ensure quality and distance.

The last test assured step to ensure our products to be shipped with perfect package.

Order Information

Part Number	Description
QSFP28-100G-BX20	QSFP28 100GBASE-BX20 1280NM-TX/1310NM-RX 20KM TRANSCEIVER
QSFP28-100G-BX20	QSFP28 100GBASE-BX20 1310NM-TX/1280NM-RX 20KM TRANSCEIVER