IPC104-2M-B Camera Data Sheet

Copyright © 2023 FS.COM All Rights Reserved

Contents

Overview 3

Key features 3

Specifications 5

Dimensions 7

Additional information 7

Document history 7

Copyright © 2023 FS.COM All Rights Reserved

Overview

Bullet network cameras can provide a high-definition professional surveillance and security solution. With the flexible 3-axis adjustment, you can place and position the camera anywhere. High quality image with 2MP,1/2.7" Progressive, CMOS sensor, support smart intrusion prevention, include enter Area, leave Area detection.

- Captures 2MP Full HD Video
- With IR Range, Night Vision Distance up to50m (164ft)
- H.265 Reduces Bandwidth and Storage, While Preserving High Image Quality
- Water and Dust Resistant (IP67)
- Clear Imaging Against Strong Backlight Due to WDR

Key features

Plug and play PoE connection

With only a single ethernet cable to get powered and transmit video, PoE (Power over Ethernet) cameras allow you to DIY their positions anywhere you want. No need of a separate power adapter for power supply of each camera, simplifying installation and helping to keep costs low.

120dB True WDR

Cameras with True Wide Dynamic Range (True WDR) can produce images even under varying light conditions. It can alsomaintainproper image brightness, exposure and contrast to ensure good image clarity. WDR is measured in dB. A WDR of range (120dB) cancapture greater scale of brightness.

Copyright © 2023 FS.COM All Rights Reserved

3D DNR

Developed for shooting at night or in dimly lit places, 3D Digital Noise Reduction (DNR) decreases picture noise and reduces colourmixture errors. 3D DNR removes the grainy fuzzy appearances of low light images, will handle moving objects without leaving tails behind, and in low light, it makes an image clearer and sharper compared to no noise reduction or 2D DNR. 3D DNR is essential toproducing a clear image from your security cameras.

Smart IR technology

Smart IR technology can detect the infrared (IR) wavelengths, enabling the cameras to see even in low light condition or in complete darkness, and providing protection day and night.

IP67 protection

IP67 rated housing protects the camera against rain and dust. Capable of withstanding temperatures from -30 ~ 60 ° C(-22~140° F), the cameras perform well even in demanding environments.

H.265 and smart encoding technology

Smart encoding technology can reduce storage costs without sacrificing resolution and frame rate. Under the same configuration, H.265 with smart encoding technology only costs one hard disk to store the same video record which needs four hard disks under H.264, saving 75% storage cost.

Multiple ways of management

The camera supports different ways of management. Free monitoring softwares and Apps are available to view, manage and record the camera through the connected NVR, computer or mobile phone.

Copyright © 2023 FS.COM All Rights Reserved

Specifications

Table 1 shows the technical specification for FS IPC104-2M-B.

Table 1. Technical specification

Camera	
Sensor	1/2.7", Progressive Scan, CMOS
Minimum Illumination	Colour: 0.01Lux (F1.8, AGC ON) 0Lux with IR on
Shutter	Auto/Manual, 1 ~ 1/100000s
Adjustment Angle	Pan: 0° ~ 360° Tilt: 0° ~ 90° Rotate: 0° ~360°
Digital Noise Reduction	2D/3D DNR
Day/Night	IR-cut Filter with Auto Switch (ICR)
IR Range	Up to 50m (164ft) IR Range
S/N	＞52dB
Defog	Digital Defog
WDR	120dB
Lens	
Lens type	2.8~12mm,AFautomaticfocusingandmotorizedzoomlens
Field of View (H)	108.05°~32.59°
Field of View (V)	56.81°~18.36°
Field of View (O)	111.91°~36.53°
DORI	
DORI Distance (m)	Detect: 42-180, Observe: 16.8-72, Recognize: 8.4-36, Identify: 4.2-18
Audio	
Audio Compression	G.711
Suppression	Supported
Sampling Rate	8KHZ

Copyright © 2023 FS.COM All Rights Reserved

Video	
Video Compression	H.265+,H.265,H.264, MJPEG
H.264 Code Profile	Baseline profile, Main profile, High profile
Frame Rate	MainStream: 1080P(1920*1080), Max30fps; 720P(1280*720), Max30fpsSubStream: 720P(1280*720), Max30fps; D1(720*576), Max30fps; 640*360, Max30fps; 2CIF(704*288), Max30fps; CIF(352*288), Max30fps
HLC	Supported
BLC	Supported
OSD	Up to 4 OSDs
Privacy Mask	Up to 4 Areas
ROI	Up to 8 Areas
Motion Detection	Up to 4 areas
Network	
Protocols	IPv4, IGMP, ICMP, TCP, UDP, DHCP, RTP, RTSP, RTCP, DNS, DDNS, NTP, UPnP, HTTP, RTMP
Compliance	NDAA Section 889 Compliant
Interoperability	ONVIF® Profile G, ONVIF® Profile S, ONVIF® Profile T specification at onvif.org
Interface	
Network	10/100M Base-TX Ethernet
Built-in Mic	Supported
Smart	
Behavior Detection	Intrusion(Based on Human Body Detection), Motion Detection, Tampering Alarm, Audio Detection

*ONVIF is a trademark of ONVIF, Inc.

Copyright © 2023 FS.COM All Rights Reserved

General

Power	DC 12V±25%, PoE
Power Consumption	Max 3.5W
Dimensions (LxWxH)	198×74×74mm(7.8”×2.9”×2.9”)
Weight	0.51kg (1.12lb)
Working Environment	-30° C ~ 60° C (-22° F ~ 140° F)
Humidity	≤95% RH (Non-condensing)
Surge Protection	6KV
Ingress Protection	IP67
Material	Metal+Plastic+PC
Reset Button	Supported

Copyright © 2023 FS.COM All Rights Reserved

Dimensions

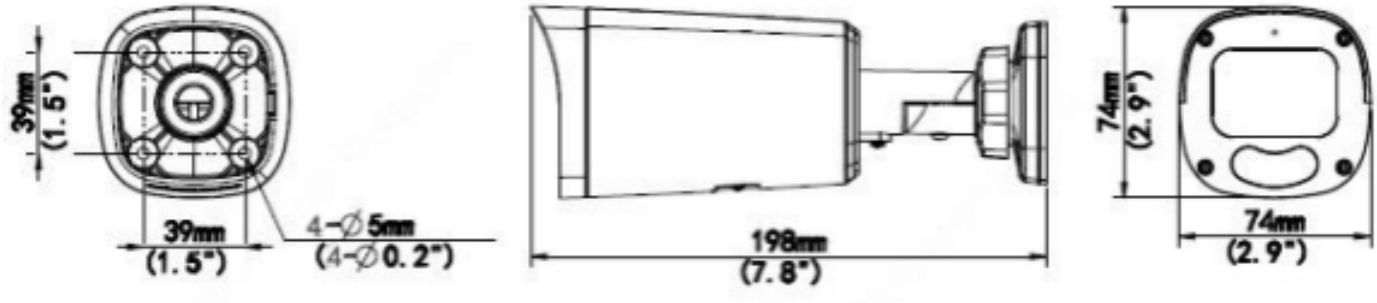

Additional information

For more information about the IPC104-2M-B camera, contact your account manager or visit

https://www.fs.com/products/170049.html

Document history

New or revised topic	Described in	Date
Updates to FS IPC104-2M-B Camera Data Sheet	Updated all	3/15/2025

Copyright © 2023 FS.COM All Rights Reserved

Shenzhen (China)

Address: 24F, Yingfeng Center, Haitian 2nd Rd, Nanshan District, Shenzhen
Tel: +86 (755) 8357 1351
Email: sales@feisu.com

Delaware (United States)

Address: 380 Centerpoint Blvd, New Castle, DE 19720, United States
Tel: +1 (888) 468 7419
Email: us@fs.com

Munich (Germany)

Address: NOVA Gewerbepark Building 7, Am Gfild 7,85375 Neufahrn bei Munich, Germany
Tel: +49 (0) 8165 4099 260
Email: de@fs.com

Singapore

Address: 30A Kallang Pl, #11-10/11/12 Singapore 339213
Tel: +65 6443 7951
Email: sg@fs.com

Wuhan (China)

Address: 9-14F, Optical Valley Software Park A7, Guanshan Ave, Wuhan
Tel: +86 (027) 8808 9195
Email: sales@feisu.com

Birmingham (United Kingdom)

Address: Regus Edmund House, 12-22 Newhall Street, Birmingham, B3 3AS
Tel: +49 (0) 8165 4099 260
Email: uk@fs.com

Melbourne (Australia)

Address: 57-59 Edison Rd, Dandenong South, VIC 3175, Australia
Tel: +61 3 9693 3488
Email: au@fs.com

Tokyo (Japan)

Address: JS Progress Building, 4-1-23 Heiwajima, Ota-ku, Tokyo 〒143-0006
Tel: 03-5826-8305
Email: jp@fs.com

FS has several offices around the world. Addresses, phone numbers are listed on the FS Website at https://www.fs.com/contact_us.html
FS and FS logo are trademarks or registered trademarks of FS in the U.S. and other countries.

Copyright © 2023 FS.COM All Rights Reserved