IPC101-2M-T Camera Data Sheet

Copyright © 2023 FS.COM All Rights Reserved

Contents

Overview 3

Key features 3

Specifications 5

Dimensions 8

Additional information 8

Document history 8

Copyright © 2023 FS.COM All Rights Reserved

Overview

Turret network cameras can provide a high-definition professional surveillance and security solution. With the flexible 3-axis adjustment, you can place and position the camera anywhere.
Adopting the smart IR technology,the turret cameras can also deliver clear video at night.Smart encoding technology and H.265 compression code can save 75% disk space and reduce the monitoring cost.Designed for indoor and outdoor environments,it is IP67 weatherproof,ideal for houses,enterprises,banks,governments and other applications.

- Captures 2MP Full HD Video
- Smart IR Range, Night Vision Distance up to 30m (98ft)
- H.265 Reduces Bandwidth and Storage, While Preserving High Image Quality
- Water and Dust Resistant (IP67)
- Clear Imaging Against Strong Backlight due to WDR

Key features

Plug and play PoE connection

With only a single ethernet cable to get powered and transmit video, PoE (Power over Ethernet) cameras allow you to DIY their positions anywhere you want. No need of a separate power adapter for power supply of each camera, simplifying installation and helping to keep costs low.

DWDR

Cameras with Digital Wide Dynamic Range (DWDR) can produce images even under varying light conditions. It can also maintain proper image brightness, exposure and contrast to ensure good image clarity. WDR is measured in dB. A WDR of range can capture greater scale of brightness.

Copyright © 2023 FS.COM All Rights Reserved

3D DNR

Developed for shooting at night or in dimly lit places, 3D Digital Noise Reduction (DNR) decreases picture noise and reduces colourmixture errors. 3D DNR removes the grainy fuzzy appearances of low light images, will handle moving objects without leaving tails behind, and in low light, it makes an image clearer and sharper compared to no noise reduction or 2D DNR. 3D DNR is essential toproducing a clear image from your security cameras.

IP67 protection

IP67 rated housing protects the camera against rain and dust. Capable of withstanding temperatures from -20 ~ 60 ° C(-4~140° F), the cameras perform well even in demanding environments.

H.265 and smart encoding technology

Smart encoding technology can reduce storage costs without sacrificing resolution and frame rate. Under the same configuration, H.265 with smart encoding technology only costs one hard disk to store the same video record which needs four hard disks under H.264, saving 75% storage cost.

Multiple ways of management

The camera supports different ways of management. Free monitoring softwares and Apps are available to view, manage and record the camera through the connected NVR, computer or mobile phone.

Copyright © 2023 FS.COM All Rights Reserved

Specifications

Table 1 shows the technical specification for FS IPC101-2M-T.

Table 1. Technical specification

Camera					
Sensor	1/2.8", Progressive Scan, CMOS				
Minimum Illumination	Colour: 0.02Lux (F2.1,AG CON) 0Lux with IR				
Day/Night	IR-cutfilter with auto switch (ICR)				
Shutter	Auto/Manual, 1~1/100000s				
WDR	DWDR				
S/N	＞52dB				
Adjustment Angle	Pan:0°~360°	Tilt:0°~80°	Rotate:0°~360°		
Lens					
Lens Type	2.8mm@F2.1				
Optical Zoom	N/A				
Iris	Fixed aperture				
Angle of View (H)	106.7°				
Angle of View (V)	57.1°				
Angle of View (D)	115.7°				
IR Range	Up to 30m (98ft) IR range				
DORI Distance	Lens(mm)	Detect(m)	Observe(m)	Recognize(m)	Identify(m)
	2.8	43.4 (142.5ft)	17.4 (57.0ft)	8.7 (28.5ft)	4.3 (14.3ft)
Video					
Video Compression	H.265+, H.265, H.264				
Frame Rate	Main Stream: 1080P (1920x 1080), Max 25fps; 720P (1280x 720), Max 25fps; Sub Stream: D1 (720x 576), Max 25fps; 640x 360,Max 25fps; 2CIF(704x 288), Max 25fps; CIF(352x 288), Max 25fps;				
H.264 Code Profile	Baseline profile, Main profile, High profile				

Copyright © 2023 FS.COM All Rights Reserved

Motion Detection	Up to 4 areas
ROI	Up to 8 areas
Video Stream	Dual streams
OSD	Up to 4 OSDs
Privacy Mask	Up to 4 areas
Image	
Digital Noise Reduction	2D/3D DNR
Smart IR	Up to 30m (98ft) IR range
HLC	Supported
BLC	Supported
Defog	Digital Defog
Interface	
Network	10/100M Base-TX Ethernet
Built-in Mic	Supported
Audio	
Audio Compression	G.711
Suppression	Supported
Sampling Rate	8KHZ
User/Host	Up to 32 users. 2 user levels: administrator and common user
Security	Password protection, Strong password, HTTPS encryption, Export operation logs, Basic and digest authentication for RTSP, Digest authentication for HTTP, TLS 1.2, WSSE and digest authentication for ONVIF
Network	
Protocols	IPv4, IGMP, ICMP, TCP, UDP, DHCP, RTP, RTSP, RTCP, DNS, DDNS, NTP, UPnP, HTTP, RTMP
Compliance	NDAA Section 889 compliant

Copyright © 2023 FS.COM All Rights Reserved

General

Power	DC 12V±25%, PoE Power consumption: Max 3.5W
Dimensions (ØxH)	Ø4.6 ” x3.8 ” (Ø118x97mm)
Weight	0.25kg (0.55lb)
Working Environment	-30° C ~ 60° C (-22° F ~ 140° F), Humidity: ≤95% RH (non-condensing)
Surge Protection	4KV
Ingress Protection	IP67
Reset Button	N/A
Material	Plastic+Metal

Copyright © 2023 FS.COM All Rights Reserved

Dimensions

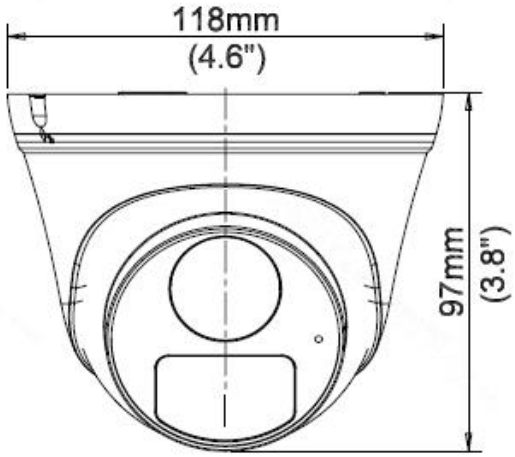

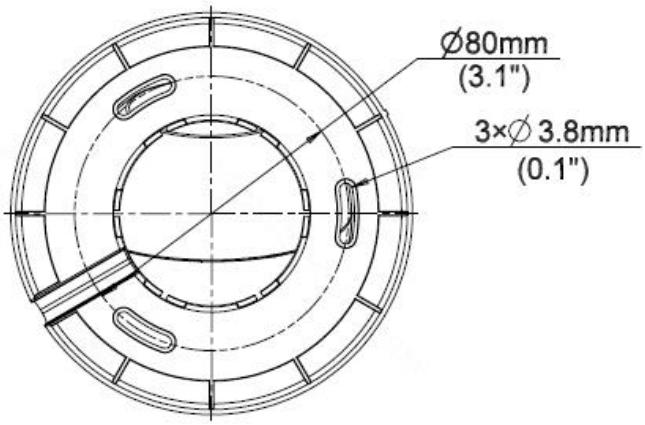

Additional information

For more information about the IPC101-2M-T camera, contact your account manager or visit https://www.fs.com/products/170047.html

Document history

New or revised topic	Described in	Date
Updates to FS IPC101-2M-T Camera Data Sheet	Updated all	3/3/2023

Copyright © 2023 FS.COM All Rights Reserved

Shenzhen (China)

Address: 24F, Yingfeng Center, Haitian 2nd Rd, Nanshan District, Shenzhen
Tel: +86 (755) 8357 1351
Email: sales@feisu.com

Delaware (United States)

Address: 380 Centerpoint Blvd, New Castle, DE 19720, United States
Tel: +1 (888) 468 7419
Email: us@fs.com

Munich (Germany)

Address: NOVA Gewerbepark Building 7, Am Gfild 7,85375 Neufahrn bei Munich, Germany
Tel: +49 (0) 8165 4099 260
Email: de@fs.com

Singapore

Address: 30A Kallang Pl, #11-10/11/12 Singapore 339213
Tel: +65 6443 7951
Email: sg@fs.com

Wuhan (China)

Address: 9-14F, Optical Valley Software Park A7, Guanshan Ave, Wuhan
Tel: +86 (027) 8808 9195
Email: sales@feisu.com

Birmingham (United Kingdom)

Address: Regus Edmund House, 12-22 Newhall Street, Birmingham, B3 3AS
Tel: +49 (0) 8165 4099 260
Email: uk@fs.com

Melbourne (Australia)

Address: 57-59 Edison Rd, Dandenong South, VIC 3175, Australia
Tel: +61 3 9693 3488
Email: au@fs.com

Tokyo (Japan)

Address: JS Progress Building, 4-1-23 Heiwajima, Ota-ku, Tokyo 〒143-0006
Tel: 03-5826-8305
Email: jp@fs.com

FS has several offices around the world. Addresses, phone numbers are listed on the FS Website at https://www.fs.com/contact_us.html
FS and FS logo are trademarks or registered trademarks of FS in the U.S. and other countries.

Copyright © 2023 FS.COM All Rights Reserved