Horizontal Cable Managers with D-rings

Route cables and maintain a neat, organized cable layout within enclosures or racks.

Horizontal Cable Managers with D-rings

Horizontal cable management using D-rings is one of the most basic forms of rack cable management. Easily route large amounts of cable through robust rings. The superior bend radius control feature helps to guard against kinks and snags.

FS high capacity horizontal cable managers provide an efficient way to manage high-performance copper, fiber, etc.

Features

- Fits standard EIA 19" racks or cabinets.
- Allows easy access to cables for MACs.
- Flexible D-rings prevent snags.
- Helps eliminate cable stress.
- Required mounting hardware is included.

Standards Compliance

- RoHS Compliant
- ISO9001 Certificate
- WEEE Certificate

Product Specifications

Part Number	CMH-5DR1U-N	CMH-5DR1U	CMH-4DRB1U*1	CMH-6DR1U*2
Pic.				
Style	D-rings Style	Detachable D-rings Style	D-rings Style with Integrated Brush Strip	D-rings Style with End Rings
Number of Rings	5	5	4	6
Orientation	Horizontal	Horizontal	Recessed Horizontal	Horizontal with Vertical Rings
Panel Material	Steel, Powder-coated Black	Steel, Powder-coated Black	Steel, Powder-coated Black	Steel, Powder-coated Black
D-rings Material	Steel, Powder-coated Black	Polycarbonate (PC), UL 94V-2	Steel, Powder-coated Black	Steel, Powder-coated Black
Color	Black			
No. of Rack Spaces	1U			
Application	Cable Managenent for Copper, Fiber, etc.			
Included Accessories	M6*15mm Screw x4 and M6 Nut x4			
Dimensions (HxWxD)	1.73"x19.00"x3.46" (44x482.6x88mm)	1.73″x19.00″x3.37″ (44.0x482.6x85.5mm)	1.73"x19.00"x3.46" (44x482.6x88mm)	1.73"x19.00"x3.46" (44x482.6x88mm)

Note:

- *1 It includes a brush strip feature which provides access into the rear of the rack, helping to prevent equipment from overheating.
- *2 It can meet vertical and horizontal cabling needs at the same time. The rings on both ends and front plate can provide cable strain relief for more reliable connections.
- *2 It cannot be used with a vertical cable manager in the same cabinet and the distance between the posts and mounting rails should be more than 1.97".

Cable Capacity Reference Guide

CMH-5DR1U-N*3

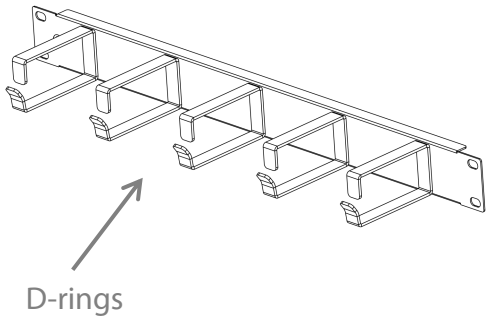

CMH-5DR1U*4

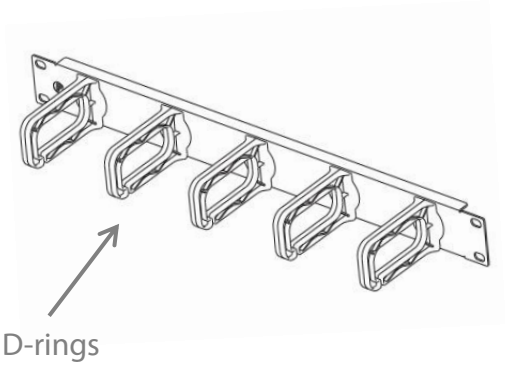

CMH-4DRB1U

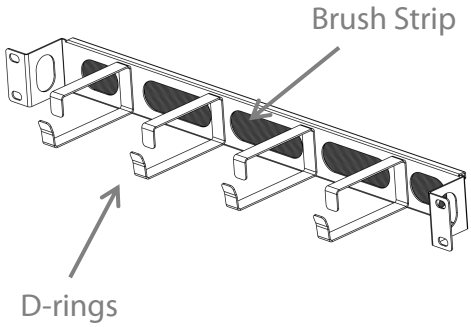

CMH-6DR1U

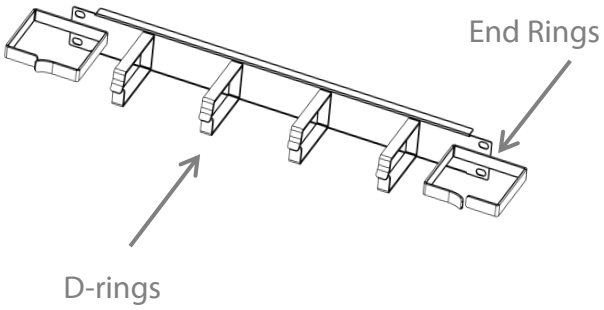

PART NUMBER	CABLE CAPACITY									
	CAT5E 24AWG-5.5mm		CAT6 24AWG-6.1mm		CAT6 SLIM 28AWG-3.8mm		CAT6A/CAT7 26AWG-6.2mm		CAT8 28AWG--6.2mm	
	30%	100%	30%	100%	30%	100%	30%	100%	30%	100%
CMH-5DR1U-N*3	31	103	25	83	63	209	24	80	24	80
CMH-5DR1U*4	21	70	17	55	42	140	16	53	16	53
CMH-4DRB1U	33	110	26	87	66	221	25	84	25	84
CMH-6DR1U	33 (D)	110 (D)	26 (D)	87 (D)	66 (D)	221 (D)	25 (D)	84 (D)	25 (D)	84 (D)
	59 (E)	195 (E)	46 (E)	153 (E)	122 (E)	408 (E)	45 (E)	150 (E)	45 (E)	150 (E)

Note:

- The managers can be used with copper, fiber, etc. And the above cable capacity of coppers are theoretical values for reference only.
- 30% is recommended cable fill, and 100% is maximum cable fill. (D: D-ring, E: End ring)
- *3 1U Metal Horizontal Cable Manager with 5 D-rings
- *4 1U Metal Horizontal Cable Manager with 5 Detachable Plastic D-rings

Product Specifications

CMH-5DR1U-N

Side View

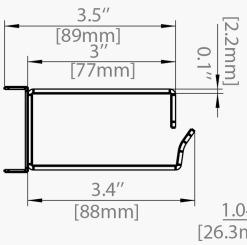

Front View

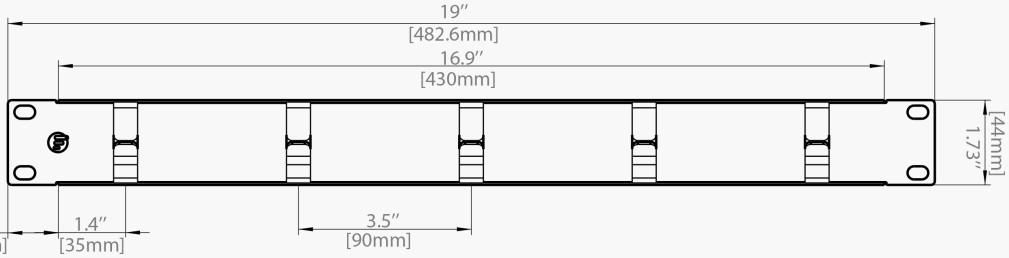

CMH-5DR1U

Side View

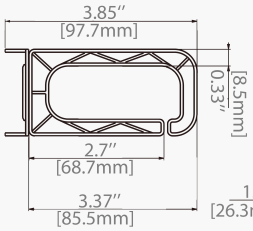

Front View

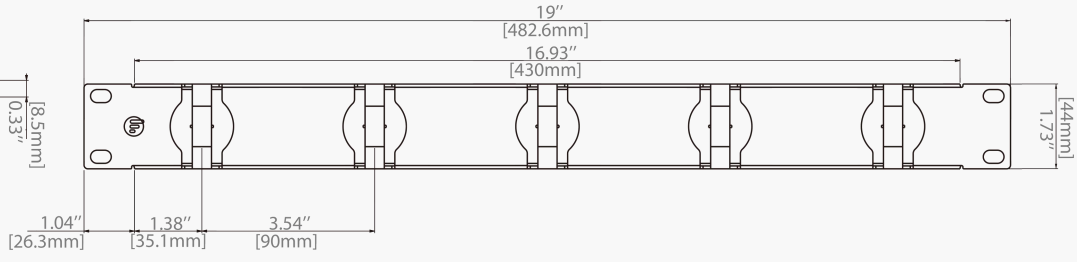

Dimensions are in inches. (Dimensions in parentheses are in millimeters).

Product Specifications

CMH-4DRB1U

Side View

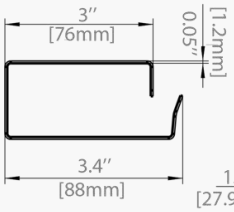

Front View

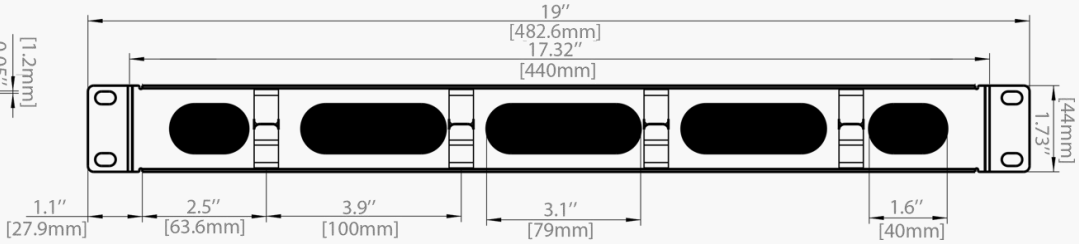

CMH-6DR1U

Side View

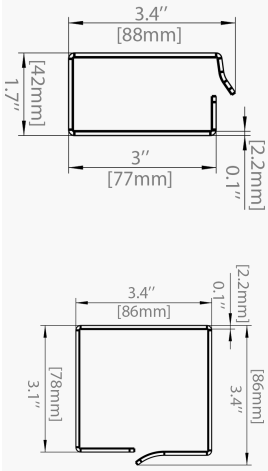

Front View

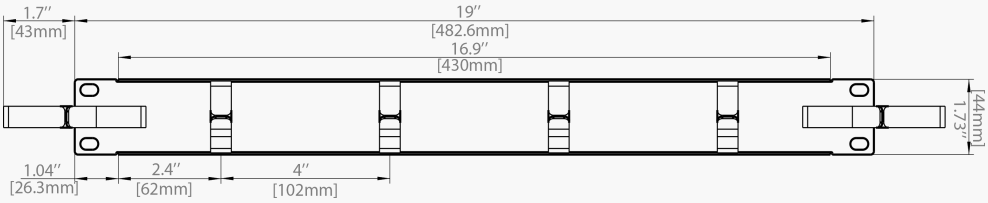

Dimensions are in inches. (Dimensions in parentheses are in millimeters).

Product List

I. Horizontal Cable Manager List

Item No.	#ID	Description
1	#29038	1U Plastic Single Sided Horizontal Cable Manager with Finger Duct
2	#29039	2U Plastic Single Sided Horizontal Cable Manager with Finger Duct
3	#29040	1U Plastic Dual Sided Horizontal Cable Manager with Finger Duct
4	#72911	1U Metal Horizontal Lacer Panel with 5 Rotating and Detachable Plastic D-rings
5	#120680	1U Metal Horizontal Cable Manager with 5 Detachable Plastic D-rings
6	#177305	1U Metal Horizontal Cable Manager with 5 D-rings
7	#68690	1U Metal Recessed Horizontal Cable Manager with 4 D-rings & Brush Strip
8	#64184	1U Metal Horizontal Cable Manager with End Rings Manager
9	#29033	1U Metal Horizontal Cable Manager with Brush Strip
10	#59566	1U L-Shaped Horizontal Cable Lacer Bar with Angled 4" Offset, 5pcs/pack

II. Matching Product List

Item No.	#ID	Description
1	#96427	FHD 1U Fixed Rack Mount Enclosure
2	#70419	FHD 1U Modular Rack Mount Enclosure
3	#35530	FHU 1U 19'' 48 Fibers OS2 Single Mode Fiber Adapter Panel
4	#108710	S5860-20SQ, 24-Port Ethernet L3 Fully Managed Pro Switch
5	#70595	3ft (0.9m) Cat6 Snagless Unshielded (UTP) PVC CM Ethernet Network Patch Cable
6	#70664	2ft (0.6m) Cat6a Snagless Shielded (SFTP) PVC CMX Ethernet Network Patch Cable
7	#40191	1m (3ft) LC UPC to LC UPC Duplex OS2 PVC (OFNR) 2.0mm Fiber Optic Patch Cable
8	#68017	1m (3ft) MTP® Female Type B Plenum (OFNP) OM4 (OM3) 50/125 Elite Trunk Cable
9	#29015	25pcs/Bag 10in.L x 0.5in.W T type Reusable Cable Ties-Colorful
10	#61882	25m/Roll 1000in.L x0.48in.W Back to Back Reusable Cable Ties-Black