FHZ MTP®-LC Cassettes

Premium Ultra High
Pre-terminated Modular Cassette System

Description

FHZ Premium MTP® Fiber Optic Cassettes consist of pre-terminated LC connectors for quick and easy deployment in ultra high density applications. The cassettes provide efficient utilization of rack space and design flexibility, inter-connect with ultra high-density fiber cable assemblies for quick connection of remote or data center applications.

Features

- Premium ultra high-density modular design, up to 216 fibers in 1U space.
- Supports interconnect or cross-connect for 10G/40G /100G connectivity.
- Available in single mode OS2 and multimode OM3/ OM4 performance.
- Pre-terminated cassette for improved reliability and quick deployment.
- High performance connectors to achieve a low loss optical budget.
- Tool-less installation, 90% faster to install than field terminating.
- The bend insensitive fiber compliant to Telcordia, EIA/TIA and IEC standards.

Application

FHZ Premium Ultra High-density Cassettes are use in conjunction with FHZ Premium Ultra Fiber Enclosure, allow system designers to tailor configuration, reach and breakout construction to application requirements.

Product Specifications

I. Product Constructions

Fiber Count	36 Fibers
Fiber Mode	Multimode: OM4 50/125μm Single mode: OS2 9/125μm
Front Connector	Multimode: LC with UPC polish Single mode: LC with UPC polish
Rear Connector	Multimode: MTP® adapters with male ferrules (pins) and UPC polish Single mode: MTP® adapters with male ferrules (pins) and APC polish
Glass Fiber	Bend Insensitive Fiver
Material	Aluminum
Dimensions (HxWxD)	0.84"x5.49"x8.92" (21.4x139.4x226.7mm)

II. Front Connectivity

Front Connector	LC Quad
Fiber Mode	Multimode/Single Mode
Insertion Loss	Multimode: UPC ≤0.2dB Single mode: UPC ≤0.2dB
Return Loss	Multimode: UPC ≥30dB Single mode: UPC ≥50dB
Connector Clolor	Blue (Single Mode), Aqua (Multimode)
Material of Sleeve	Zirconia Ceramic

III. Rear Connectivity

Rear Connector	MTP®
Key Orientation	Key up-Key down
Insertion Loss	Multimode: Ultra low IL 0.35dB max. Single mode: Ultra low IL 0.35dB max.
Return Loss	Multimode: ≥20dB Single mode: ≥60dB
Connector Durability	MTP® connector meets TIA/EIA-568.C.3A.4.9 Durability: 500 mating cycles

Note:

The US Conec MTP® connectors are fully compliant with the MPO standards, achieving higher performance levels when compared to generic MPO connectors.

MTP® Connector (Single mode): APC Polish as default

MTP® Connector (Multimode): UPC Polish as default

IV. Environmental Characteristics

Operating Temperature	-10℃ to 60℃
Storage Temperature	-10℃ to 60℃

Polarity Illustration

In any installation, it is important to ensure that the transmitter at one end matches the corresponding receiver at the other end. FS provides a number of intelligent solutions that can help you manage and optimize your network and its connectivity.

MTP1						MTP2						MTP3					
1	12	3	10	5	8	1	12	3	10	5	8	1	12	3	10	5	8
11	2	9	4	7	6	11	2	9	4	7	6	11	2	9	4	7	6

The internal Base-12 wiring of FHZ MTP® cassette ensures the correct fiber polarity throughout the entire system.

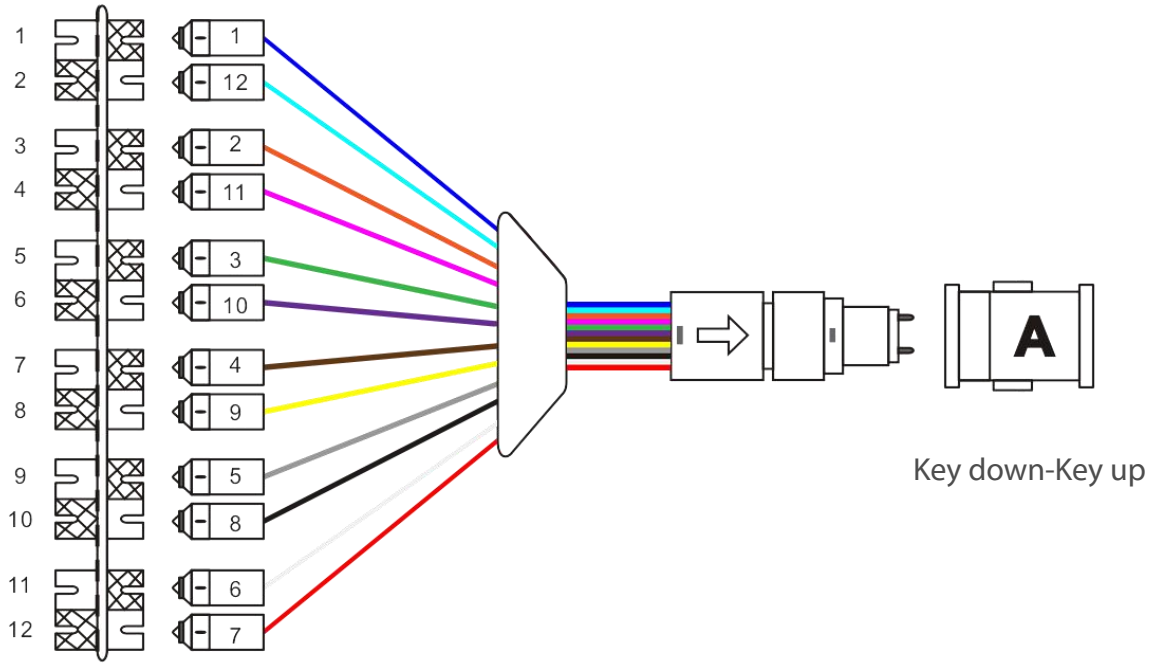

10, 40, 100 Gb/s Channel Configuration

FHZ Premium MTP® cassettes are used for interconnect or cross-connect for 10G/40G/100G connectivity if the distance between two devices is too long.

①

②

③

④

⑤

Item No.	#ID	Description
1	#72170	1m (3ft) LC UPC Uniboot Duplex Flat Clip 2.0mm PVC (OFNR) OM4 Fiber Patch Cable
2	#74184	3x MTP®-12 to LC, 36 Fibers OM4 Multimode FHZ MTP®/MPO Cassette
3	#68023	5m (16ft) MTP® Female 12 Fibers OM4 (OM3) 50/125 Multimode Trunk Cable, Type B
4	#74184	3x MTP®-12 to LC, 36 Fibers OM4 Multimode FHZ MTP®/MPO Cassette
5	#74183	1U Rack Mount Premium Ultra HD Fiber Enclosure Unloade

Layout and Dimensions

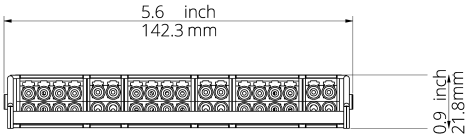

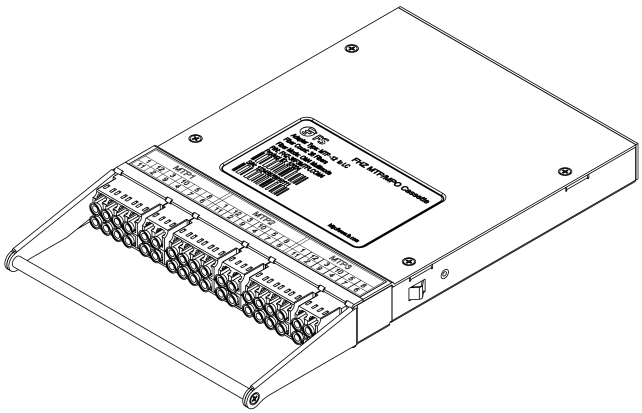

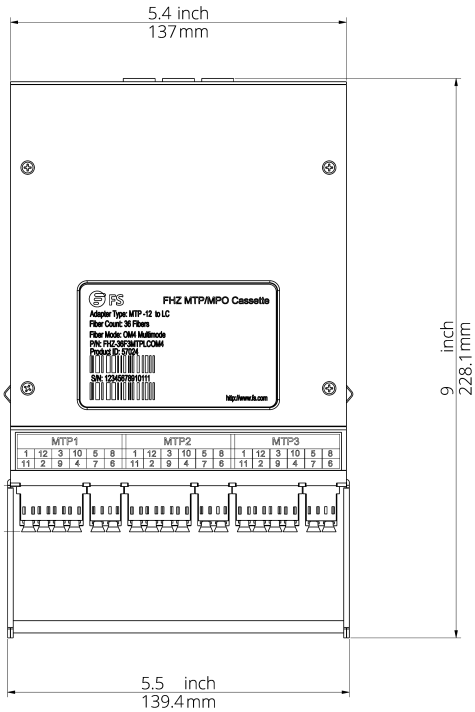

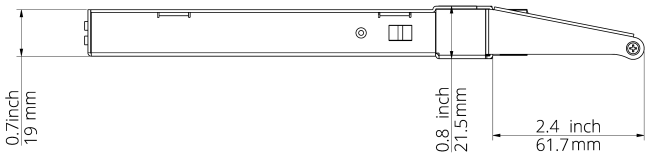

Dimensions are in inches. (Dimensions in parentheses are in millimeters).