1000BASE-LX SFP 1310nm 10km DOM Transceiver

FC-SFP-1G-LW

Application

- Gigabit Ethernet Switches and Routers
- Fiber Channel Switch Infrastructure
- Ethernet/SDH/OTN Sonet
- Other Optical Links

Features

- Operating Data Rate up to 1.25Gbps
- 10km with 9/125 μm SMF
- Single 3.3V Power Supply and TTL Logic Interface
- Hot-Pluggable SFP Footprint Duplex LC Connector Interface
- Class 1 FDA and IEC60825-1 Laser Safety Compliant
- Built-in digital diagnostic functions, including optical power monitoring
- Commercial Temperature Range: 0~+70℃
- Extended Temperature Range: -5~85℃
- Industrial Temperature Range: -40~85℃
- Compliant with MSA SFP Specification
- Compliant with SFF-8472

Description

The SFP1G-LX-31 series single-mode transceivers are small form factor pluggable module for bi-directional serial optical data communications such as Gigabit Ethernet 1000BASE-LX and Fiber Channel 1x SM-LC-L FC-PI. It is with the SFP 20-pin connector to allow hot plug capability. This module is designed for single mode fiber and operates at a nominal wavelength of 1310nm.

The transmitter section uses a multiple quantum well 1310nm laser and is a class 1 laser compliant according to International Safety Standard IEC-60825. The receiver section uses an integrated InGaAs detector preamplifier (IDP) mounted in an optical header and a limiting post-amplifier IC. The SFP1G-LX-31 series are designed to be compliant with SFF-8472 SFP Multi-source Agreement (MSA).

Product Specifications

I. General Product Characteristics

Parameter	Symbol	Min	Typ.	Max	Unit
Bit Rate	BR			1.25	Gb/s
Max. Supported Link Length	L_{MAX}			10	km

II. Absolute Maximum Ratings

*Exceeding any one of these values may destroy the device immediately

Parameter	Symbol	Min	Max	Units
Storage Temperature	Ts	-40	+85	℃
Supply Voltage	Vcc	-0.5	3.6	V
Operating Relative Humidity		-	95	%
MTBF（-40~85℃）	1,000,000 Hours			

III. Optical and Electrical Characteristics

Parameter		Symbol	Min	Typ.	Max	Unit
9μm Diameter SMF		L		10		Km
Power Supply Voltage		V_{CC}	3.15	3.3	3.45	V
Power Supply Current		I_{CC}			300	Ma
Date Rate	**GBE**			1.25		Gbps
	FC			1.063		
Transmitter						
Center Wavelength		λC	1260	1310	1360	nm
Spectral Width (RMS)		Δλ			4	nm
Average Output Power*(note1)		Pout	-9.5		-3	dBm
Extinction Ratio*(note2)		ER	9			Db
Rise/Fall Time(20%～80%)		tr/tf			0.26	ps
Total Jitter*(note2)		TJ			0.43	UI
Output Optical Eye*(note2)		IEEE802.3z and ANSI Fiber Channel Compliant*(note4)				
TX_Disable Assert Time		t_off			10	us
Pout@TX Disable Asserted		Pout			-45	dBm

Receiver

Center Wavelength	λC	1260		1600	nm
Receiver Sensitivity*(note3)	Pmin			-20	dBm
Receiver Overload	Pmax	-3			dBm
Return Loss		12			Db
LOS De-Assert	LOS_D			-22	dB
LOS Assert	LOS_A	-35			dBm
LOS Hysteresis*(note5)		0.5			Db

Notes:

1. Output is coupled into a 9/125 μm single mode fiber.
2. Filtered, measured with a PRBS 27-1 test pattern @1.25Gbps
3. Minimum avera0ge optical power measured at BER less than 1E-12, with a 27-1 PRBS and ER=9 Db.
4. Eye Pattern Mask.

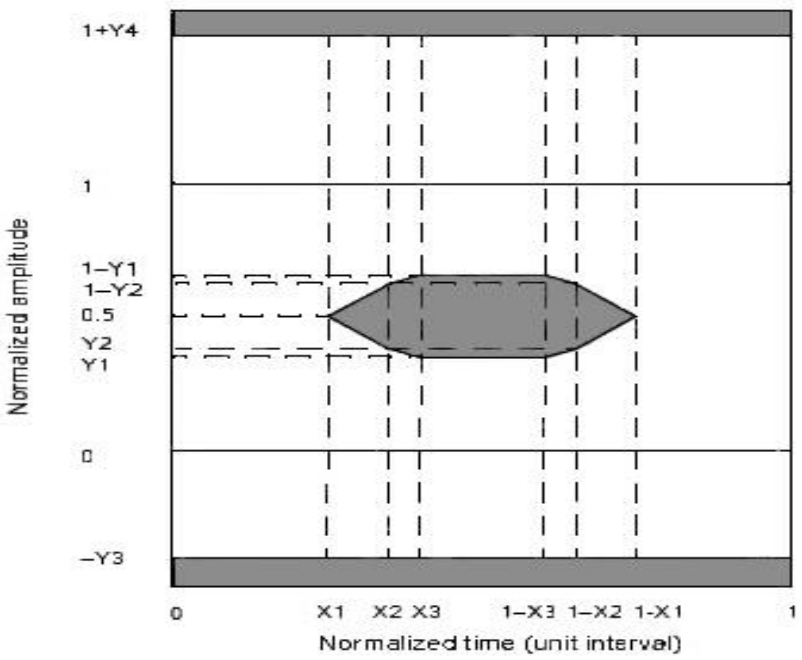

5.LOS Hysteresis

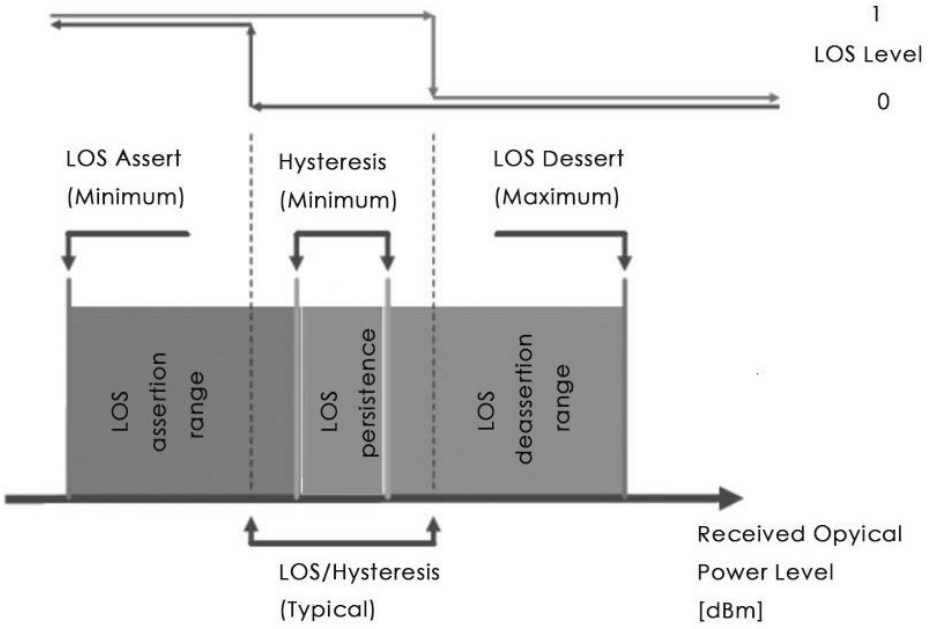

IV. Pin Description

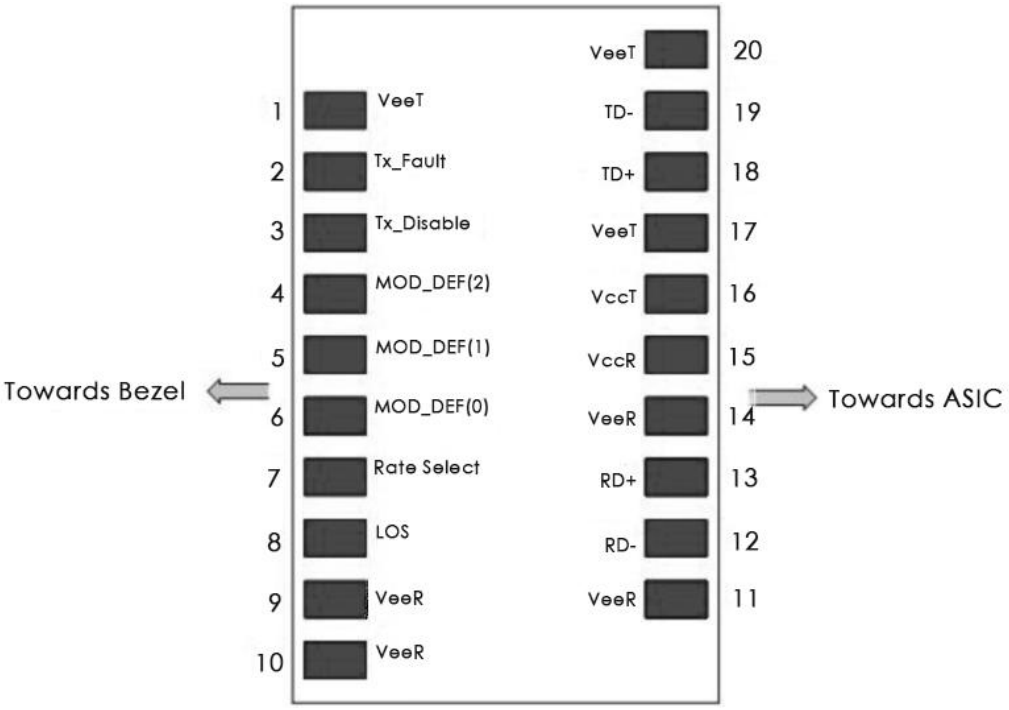

Pin Num.	Name	Function	Plug Seq.	Notes
1	VeeT	Transmitter Ground	1	Note5
2	TX Fault	Transmitter Fault Indication	3	Note 1
3	TX Disable	Transmitter Disable	3	Note 2 Module disables on high or open
4	MOD-DEF2	SDA	3	Note 3 2 wire serial ID interface.
5	MOD-DEF1	SCL	3	Note 3 2 wire serial ID interface.
6	MOD-DEF0	MOD_ABS	3	Note 3 Grounded within the module.
7	Rate Select	Not Connect	3	Function not available
8	LOS	Loss of Signal	3	Note 4
9	VeeR	Receiver Ground	1	Note 5
10	VeeR	Receiver Ground	1	Note 5
11	VeeR	Receiver Ground	1	Note 5
12	RD-	Inv. Received Data Out	3	Note 6
13	RD+	Received Data Out	3	Note 7
14	VeeR	Receiver Ground	1	Note 5
15	VccR	Receiver Power	2	Note 7 3.3V ± 5%
16	VccT	Transmitter Power	2	Note 7 3.3V ± 5%
17	VeeT	Transmitter Ground	1	Note 5
18	TD+	Transmit Data In	3	Note 8
19	TD-	Inv. Transmit Data In	3	Note 8
20	VeeT	Transmitter Ground	1	Note 5

Notes:

1. TX Fault is an open collector/drain output, which should be pulled up with a 4.7K - 10KΩ resistor on the host board. Pull up voltage between 2.0V and VccT, R+0.3V. When high, output indicates a laser fault of some kinds. Low indicates normal operation. In low state, the output will be pulled to < 0.8V.

2. TX disable is an input that is used to shut down the transmitter optical output. It is pulled up within the module with a 4.7 – 10 KΩ resistor. Its states are: Low (0 – 0.8V): Transmitter on (>0.8, < 2.0V): Undefined High (2.0 – 3.465V): Transmitter Disabled Open: Transmitter Disabled

3. Mod-Def 0,1,2. These are the module definition pins. They should be pulled up with a 4.7 – 10 KΩ resistor on the host board. The pull-up voltage shall be VccT or VccR . Mod-Def 0 is grounded by the module to indicate that the module is present Mod-Def 1 is the clock line of two wire serial interface for serial ID Mod-Def 2 is the data line of two wire serial interface for serial ID

4. LOS (Loss of Signal) is an open collector/drain output, which should be pulled up with a 4.7K – 10KΩ resistor. Pull up voltage between 2.0V and VccT/R+0.3V. When high, this output indicates the received optical power is below the worst-case receiver sensitivity (as defined by the standard in use). Low indicates normal operation. In the low state, the output will be pulled to < 0.8V.

5. VeeR and VeeT may be internally connected within the SFP module.

6. RD-/+: These are the differential receiver outputs. They are AC coupled 100Ω differential lines which should be terminated with 100Ω (differential) at the user SERDES. The AC coupling is done inside the module and is thus not required the host board. The voltage swing on these lines will be between 400 and 2000 mV differential (200 –1000 mV single ended) when properly terminated.

7. VccR and VccT are the receiver and transmitter power supplies. They are defined as 3.3V ±5% at the SFP connector pin. Maximum supply current is 300mA. The host board power supply filtering is in accordance with the SFF-8472 protocol. Inductors with DC resistance of less than 1 ohm should be used in order to maintain the required voltage at the SFP input pin with 3.3V supply voltage.When the recommended supply-filtering network is used, hot plugging of the SFP transceiver module will result in an inrush current of no more than 30mA greater than the steady state value. VccR and VccT is internally connected within the SFP transceiver module.

8. TD-/+: TD-/+: These are the differential transmitter inputs. They are AC-coupled, differential lines with 100Ωdifferential termination inside the module.The AC coupling is done inside the module and is thus not required on the host board. The inputs will accept differential swings of 400–2000mV (200–1000mV single- ended).

V. Mechanical Specifications

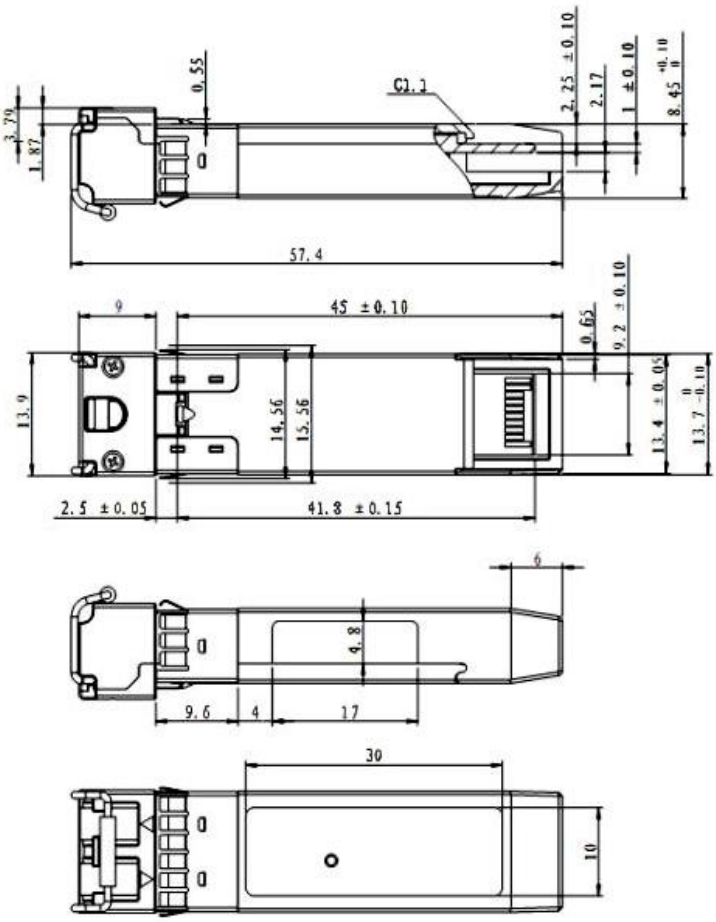

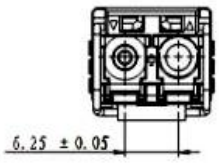

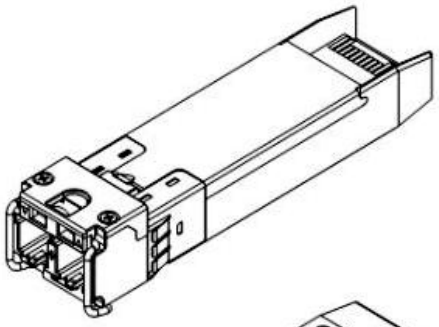

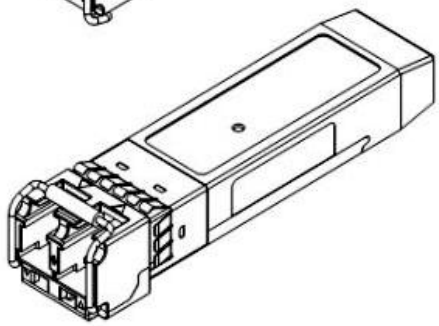

Test Center

I. Compatibility Testing

Each fiber optical transceiver has been tested in host device on site in FS Assured Program to ensure full compatibility with over 200 vendors.

Cisco Catalyst C9500-24Y4C

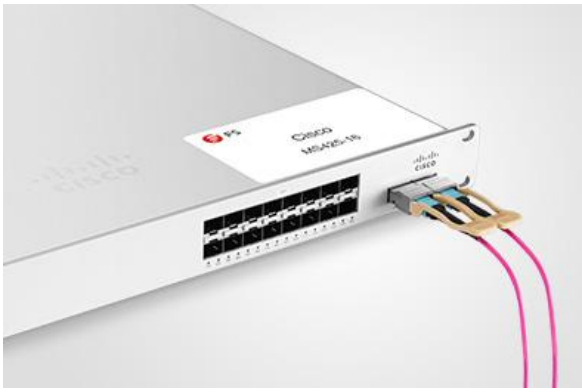

Cisco MS425-16

Brocade VDX 6940-144S

Dell EMC Networking Z9100-ON

Force⑩tm S60-44T

HUAWEI S6720-30L-HI-24S

Above is part of our test bed network equipment. For more information, please click the Test Bed PDF. It will be updated in real time as we expand our portfolio.

II. Performance Testing

Each fiber optical transceiver has been fully tested in FS Assured Program equipped with world's most advanced analytical equipment to ensure that our transceivers work perfectly on your device.

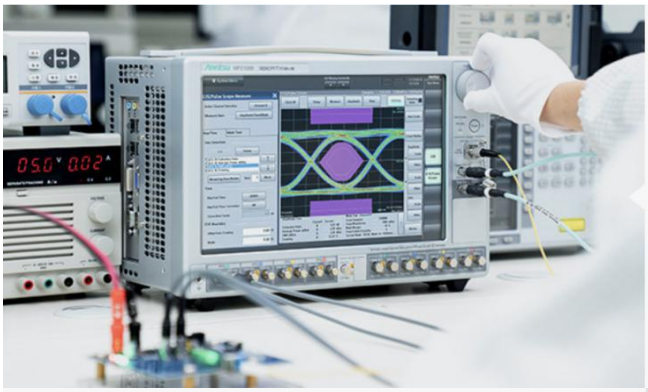

1. TX/RX Single Quality Testing

Equipped with the all-in-one tester integrated 4ch BERT & sampling oscilloscope, and variable optical attenuator the input and output signal quality.

- Eye Pattern Measurements: Jitter, Mask Margin, etc
- Average Output Power
- OMA
- Extinction Ratio
- Receiver Sensitivity
- BER Curve

2. Reliability and Stability Testing

Subject the transceivers to dramatic in temperature on the thermal shock chamber to ensure reliability and stability of the transceivers.

- Commercial: 0℃ to 70℃
- Extended: -5℃ to 85℃
- Industrial: -40℃ to 85℃

3. Transfer Rate and Protocol Testing

Test the actual transfer data rate and the transmission ability under different protocols with Networks Master Pro.

- Ethernet
- Fiber Channel
- SDH/SONET
- CPRI

4. Optical Spectrum Evaluation

Evaluate various important parameters with the Optical Spectrum Analyzer to meet the industry standards.
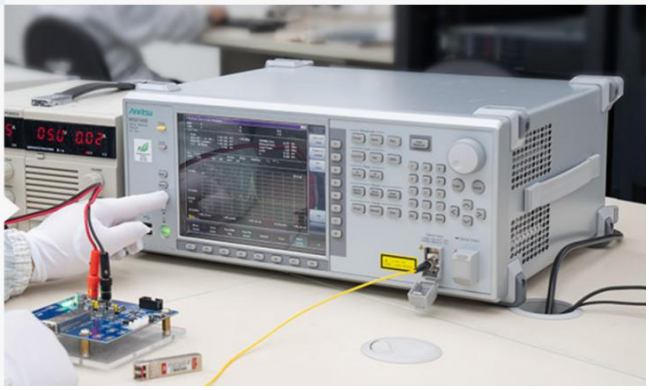
- Center Wavelength, Level
- OSNR
- SMSR
- Spectrum Width