Data Sheet

BCM957504-P425G

Quad-Port 25 Gb/s SFP28 Ethernet PCI Express 4.0 x16 Network Interface Card

General Description

The Broadcom BCM957504-P425G is a quad-port 25 Gb/s PCI Express 4.0 x16 network interface card that supports SFP28/SFP+ optical modules and copper direct-attach cables. The card uses the Broadcom BCM57504 100GbE MAC controller with an integrated quad-channel 25GbE SFI transceiver.

Features

- Quad-port pluggable media interface, which is compatible with an SFP28/SFP+ optical transceiver or a copper direct-attach cable.
- Industry's most secure PCIe adapter solution leveraging Broadcom's BroadSAFE® technology.
- Multi-Host Support: Dual-Host x8 mode[1].
- Fully compliant with the SFF-8402 standard.
- x16 PCI Express 4.0 compliant.
- SR-IOV with up to 1k virtual functions (VFs).
- Function-Level Reset (FLR) support.
- TruFlow™ flow processing engine.
- Virtual Network Termination – VXLAN, NVGRE, Geneve, GRE encap/decap.
- vSwitch Acceleration.
- Tunnel-aware stateless offloads.
- DCB support – PFC, ETS, QCN, DCBx.
- RDMA over Converged Ethernet (RoCE)
- Network Controller Sideband Interface (NC-SI)[1].
- SMBus 2.0.
- MCTP over SMBus.
- Jumbo frames up to 9 KB.
- Advanced congestion avoidance.
- Multiqueue, NetQueue, and VMQ.
- IPv4 and IPv6 offloads.
- TCP, UDP, and IP checksum offloads.
- Large send offload (LSO).
- Large receive offload (LRO).
- TCP segmentation offload (TSO).
- Receive-side scaling (RSS).
- Transmit-side scaling (TSS).
- VLAN insertion/removal.
- Interrupt coalescing.
- Network boot—PXE, UEFI.
- iSCSI boot.
- MSI and MSI-X.
- FRU support.

Applications

Quad-port 25-Gigabit SFP28 Ethernet network interface card for data centers or cloud computing.

1. Contact Broadcom for additional details.

Figure 1: BCM957504-P425G Network Interface Card

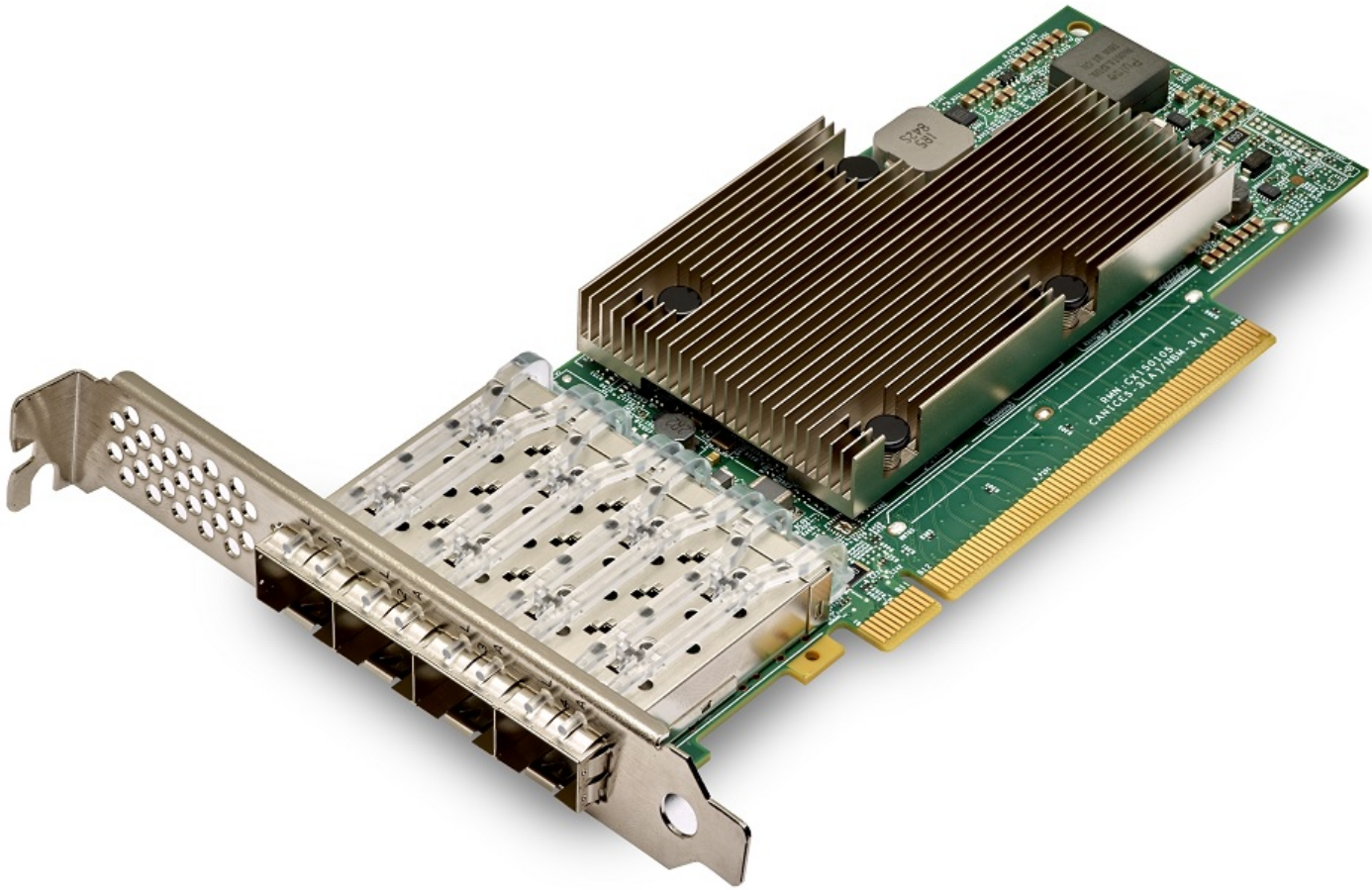

NOTE: The surface markings of the component and/or the labels may not reflect the received product. Broadcom reserves the right to change any component on the printed circuit board with the same functionality.

Table of Contents

1 Functional Description 4
1.1 Block Diagram 4
1.2 Host Interface Connector 5
1.3 BCM57504 Ethernet Controller 5
1.4 PCI Express Interface 5
1.5 SMBus Interface 5
1.6 Nonvolatile RAM 5
1.7 Heat Sink 5
1.8 Power Supplies 5
1.9 LED Functions and Locations 6
2 Regulatory and Safety Approvals 7
2.1 Regulatory 7
2.2 Safety 7
2.3 Electromagnetic Compatibility (EMC) 7
2.4 Electrostatic Discharge (ESD) Compliance 8
2.5 FCC Statement 8
2.5.1 Information to User 8
3 Board Power and Environmental Specifications 8
4 Package Weight 9
5 Physical Specifications 9
5.1 Board Physical Dimensions 10
5.2 Bracket Outlines and Dimensions 11
5.2.1 Standard-Profile Bracket Outline and Dimensions 11
5.2.2 Low-Profile Bracket Outline and Dimensions 12
6 Ordering Information 13
Revision History 14
957504-P425G-DS103; February 7, 2022 14
957504-P425G-DS102; August 20, 2021 14
957504-P425G-DS101; November 6, 2020 14
957504-P425G-DS100; October 7, 2019 14

1 Functional Description

This section provides a functional description of the BCM957504-P425G network interface card.

1.1 Block Diagram

Figure 2 shows the main functional blocks on the BCM957504-P425G network interface card.

Figure 2: BCM957504-P425G Block Diagram

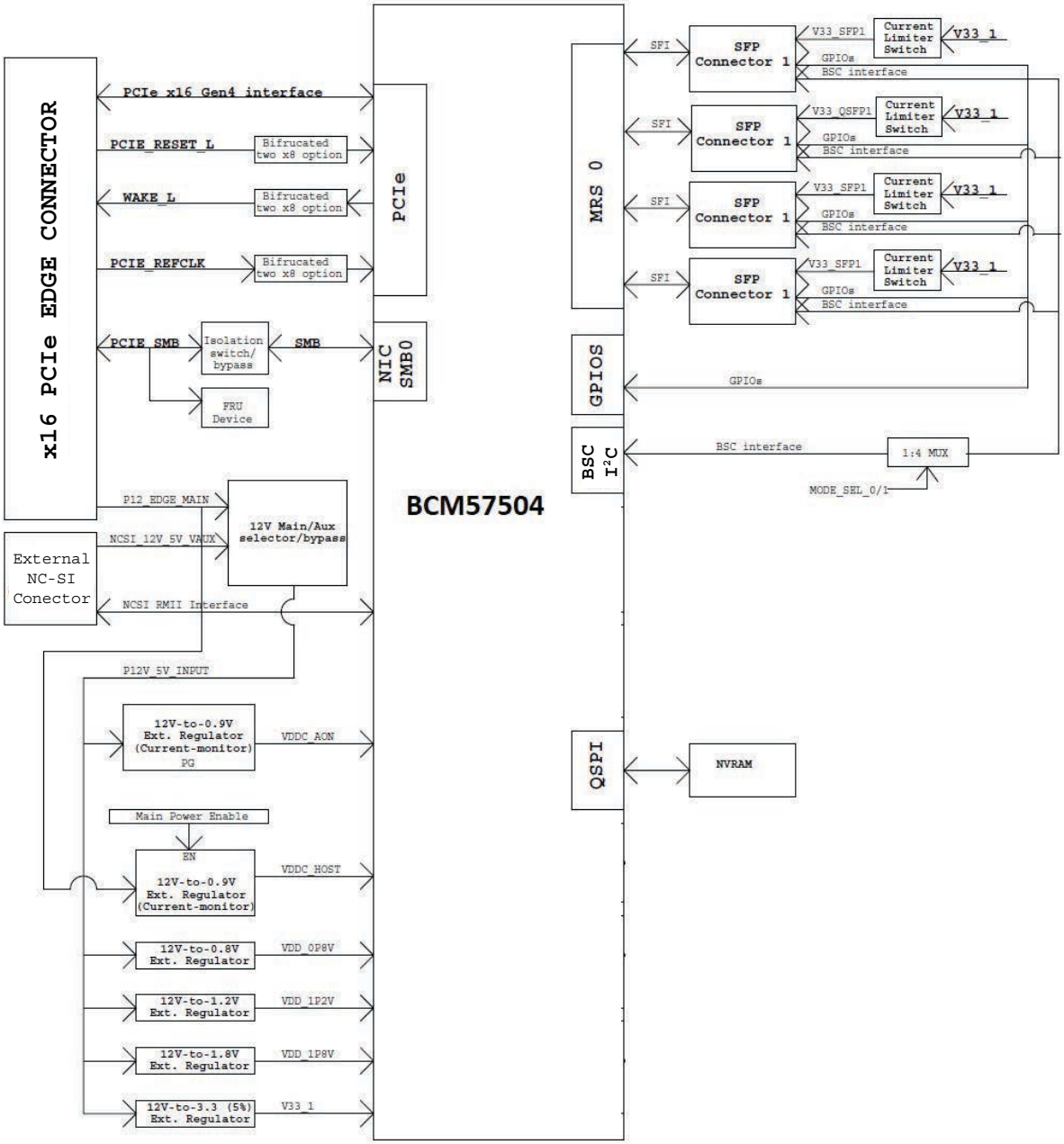

1.2 Host Interface Connector

The BCM957504-P425G NIC is a PCI Express 4.0 x16 add-in card with standard-height bracket. The card edge connector complies with the PCI Express 4.0 x16 standard pinout for add-in cards.

1.3 BCM57504 Ethernet Controller

The BCM57504 Ethernet controller is configured as quad-port 25 Gb/s interface to the line side and x16 PCI Express v4.0 interface to the system host.

1.4 PCI Express Interface

PCIe is a high-bandwidth serial bus providing a low pin-count interface as an alternative to parallel PCI. It is part of the host interface connector. The BCM57504 complies with the PCI Express Base Specification Revision 4.0, and supports a 16-lane PCIe 4.0 interface via the host interface connector.

1.5 SMBus Interface

The BCM57504 Ethernet controller SMB0 interface supports serial communications between BCM57504 and the system. The interface allows the Ethernet controller to act as an SMBus primary or a secondary device.

1.6 Nonvolatile RAM

The BCM57504 Ethernet controller requires a nonvolatile serial flash memory (NVRAM) to store the device firmware, PCI configuration space settings (for example, device ID, vendor ID), MAC address, and so on. After power-up, the firmware is downloaded into the device memory and executed by the on-chip processor.

1.7 Heat Sink

The passive heat sink is attached to the Ethernet controller using four spring-loaded push pins that insert into four mounting holes.

1.8 Power Supplies

All power is derived from the network adapter card host interface connector 12V and 3.3V supply which feeds the onboard regulators that provide the necessary power to the various components on the card. The network adapter card has six switching voltage regulators that power the card’s VDDC_AON, VDDC_HOST, +0.8V, +1.2V, +1.8V, and +3.3V loads.

1.9 LED Functions and Locations

The SFP28 port supports two LEDs to indicate traffic activities and link speed. The LEDs are visible through the cutout on the bracket as shown in Figure 3.

Figure 3: Activity and Link LED Locations

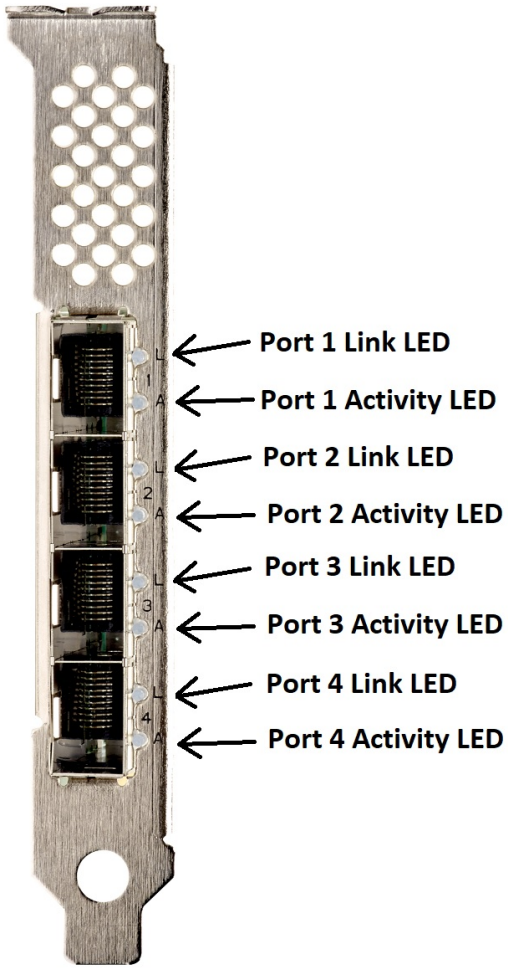

Table 1: LED Functions

LED Type	Color/Behavior	Note
Activity	Off	No Activity
	Green (blinking)	Link up (traffic flowing)
Link	Off	No Link
	Green	Linked at 25 Gb/s
	Amber	Linked at lower speed

2 Regulatory and Safety Approvals

The following sections detail the Regulatory, Safety, Electromagnetic Compatibility (EMC), and Electrostatic Discharge (ESD) standard compliance for the BCM957504-P425G network interface card.

2.1 Regulatory

Table 2: Regulatory Approvals

Item	Applicable Standard	Approval (A)/Certificate (C)
CE/European Union	EN 62368-1:2014	CB report and certificate
UL/USA	IEC 62368-1 (ed. 2)	CB report and certificate

2.2 Safety

Table 3: Safety Approvals

Country	Certification Type/Standard	Compliance
International	CB Scheme ICES 003 – Digital Device UL 1977 (connector safety) UL 796 (PCB wiring safety) UL 94 (flammability of parts)	Yes

2.3 Electromagnetic Compatibility (EMC)

Table 4: Electromagnetic Compatibility

Standard/Country	Certification Type	Compliance
CE/EU	EN 55032:2012/AC:2013 Class A EN 55024:2010 EN 61000-3-2:2014 EN 61000-3-3:2013	CE report and CE DoC
FCC/USA	CFR47 Part 15 Subpart B Class A	FCC/IC DoC and EMC report referencing FCC and IC standards
IC/Canada	ICES-003 Class A	FCC/IC DoC and report referencing FCC and IC standards
ACA/Australia, New Zealand	AS/NZS CISPR 22:2009 +A1:2010	ACA certificate
BSM/Taiwan	CNS 13438 (2006) Class A	BSMI certificate
BSMI/Taiwan	CNS 15663	BSMI certificate/RoHS table
MSIP/S. Korea	KN32 Class A KN35	Korea certificate MSIP mark
VCCI/Japan	VCCI V-3 (2015-04)	Copy of VCCI online certificate

2.4 Electrostatic Discharge (ESD) Compliance

Table 5: ESD Compliance Summary

Standard	Certification Type	Compliance
EN 55024:2010 (EN 61000-4-2)	Air/Direct discharge	Yes

2.5 FCC Statement

This device complies with part 15 of the FCC Rules. Operation is subject to the following two conditions:

- This device may not cause harmful interference.
- This device must accept any interference received, including interference that may cause undesired operation.

2.5.1 Information to User

This equipment has been tested and found to comply with the limits for a Class A legitimate device, pursuant to part 15 of the FCC Rules. These limits are designed to provide reasonable protection against harmful interference when the equipment is operated in a commercial environment. This equipment generates, uses, and can radiate radio frequency energy and, if not installed and used in accordance with the instruction manual, may cause harmful interference to radio communications. Operation of this equipment in a residential area is likely to cause harmful interference in which case the user will be required to correct the interference at his own expense.

NOTE: Changes or modifications not expressly approved by the manufacturer responsible for compliance could void the user's authority to operate the equipment.

3 Board Power and Environmental Specifications

Table 6 provides the adapter power consumption.

Table 6: Adapter Power Consumption

Adapter Power[a]	Passive DAC Cable	Optical Transceiver[b]
Typical – 50% Ethernet traffic	15.2W	18.0W
Max – 100% Ethernet traffic	16.7W	19.0W

a. Power consumption of the adapter at 55°C ambient temperature.

b. Power consumption of the adapter is measured using a Broadcom AFBR-735SMZ power level 1 optical transceiver. The total adapter power may vary with different optical transceivers.

Table 7 provides the adapter environmental specifications. The system designer may deploy methods to monitor the BCM57504 junction temperature (T_j) and provide sufficient airflow for keeping T_j below 105°C during normal operation. The Broadcom AFBR-735SMZ active transceiver is recommended for the application.

Table 7: Adapter Environmental Specifications

Airflow	Ambient Temperature	Passive DAC Cable	Optical Transceiver[a]
Hot Aisle	55°C	170 LFM	290 LFM
Storage Humidity	Relative Humidity Range (Non-condensing) maximum 90% at 35°C		
Storage Temperature	–40°C to 70°C		
Operating Temperature	0°C to 55°C		

a. Airflow requirements are measured using a Broadcom AFBR-735SMZ (power level 1, commercial temp [70°C]) optical transceiver. Check the airflow requirements of the selected optical transceivers to ensure adequate cooling to the optical transceivers.

4 Package Weight

Table 8 shows the BCM957504-P425G package weight with the standard-profile bracket installed by default (excluding the optical module).

Table 8: Package Weight

Parameter	Symbol	Value	Unit
BCM957504-P425G weight	g	160	gram

5 Physical Specifications

This section outlines the mechanical aspects of the BCM957504-P425G network interface card.

5.1 Board Physical Dimensions

The BCM957504-P425G physical board dimensions are compliant with PCI Express Card Electromechanical Specification Revision 4.0 except for minor differences with the edge finger alignment, bracket mounting scheme, and low-profile bracket opening. These differ slightly from the PCI CEM specification due to the mechanical constraint of the single quad-port SFP28 cage. It is recommended to use the associated 3D step file available from Broadcom docSAFE for mechanical simulation. The BCM957504-P425G board dimensions are shown in Figure 4. The dimensions are in inches with a tolerance of ±0.005 inches.

Figure 4: Board Physical Dimensions

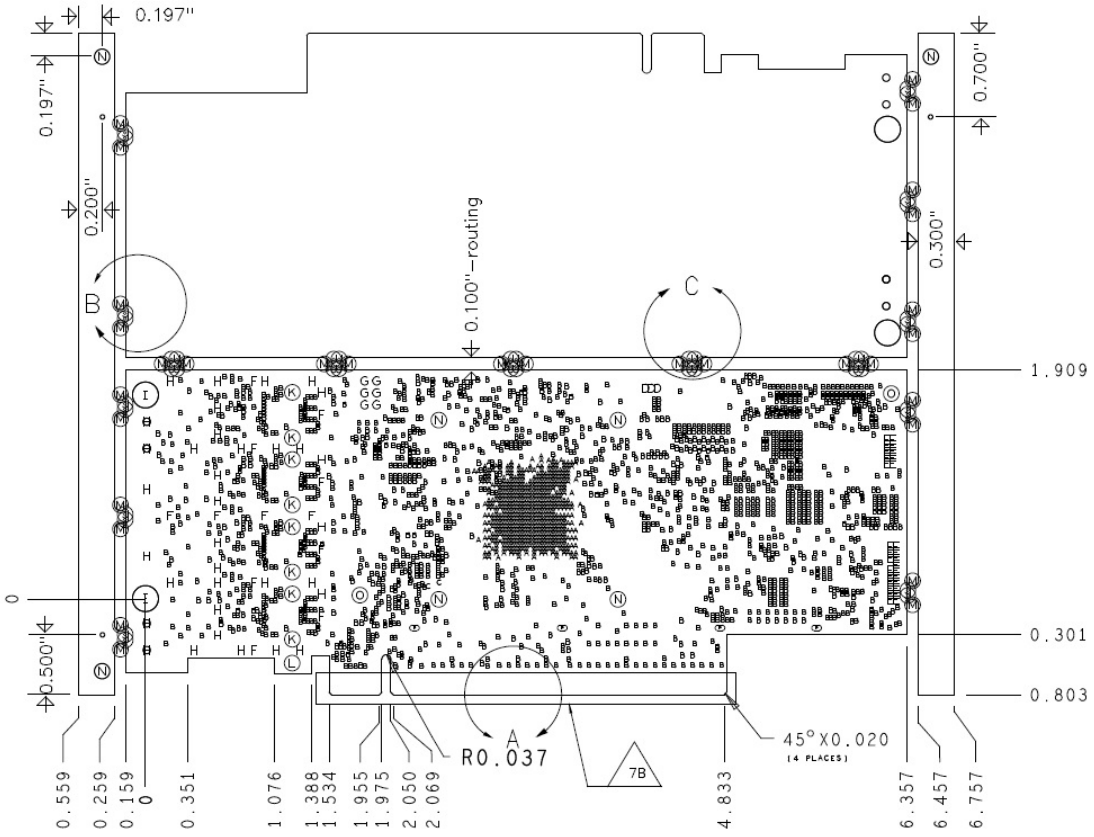

5.2 Bracket Outlines and Dimensions

The BCM957504-P425G supports both standard and low-profile brackets.

5.2.1 Standard-Profile Bracket Outline and Dimensions

Standard-profile bracket outline and physical dimensions are shown in Figure 5.

Figure 5: Standard-Profile Bracket Outline and Dimensions

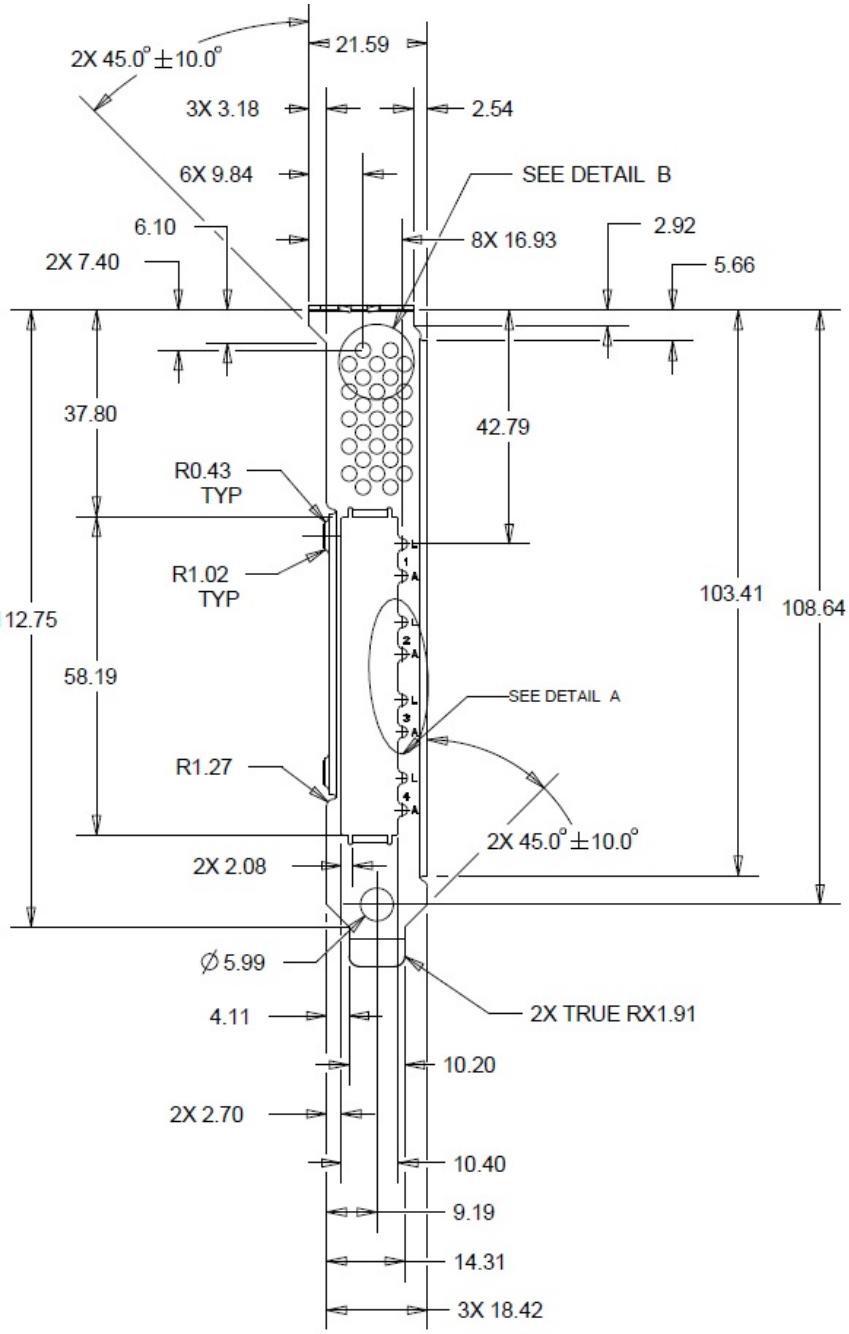

5.2.2 Low-Profile Bracket Outline and Dimensions

Low-profile bracket outline and physical dimensions are shown in Figure 6.

Figure 6: Low-Profile Bracket Outline and Dimensions

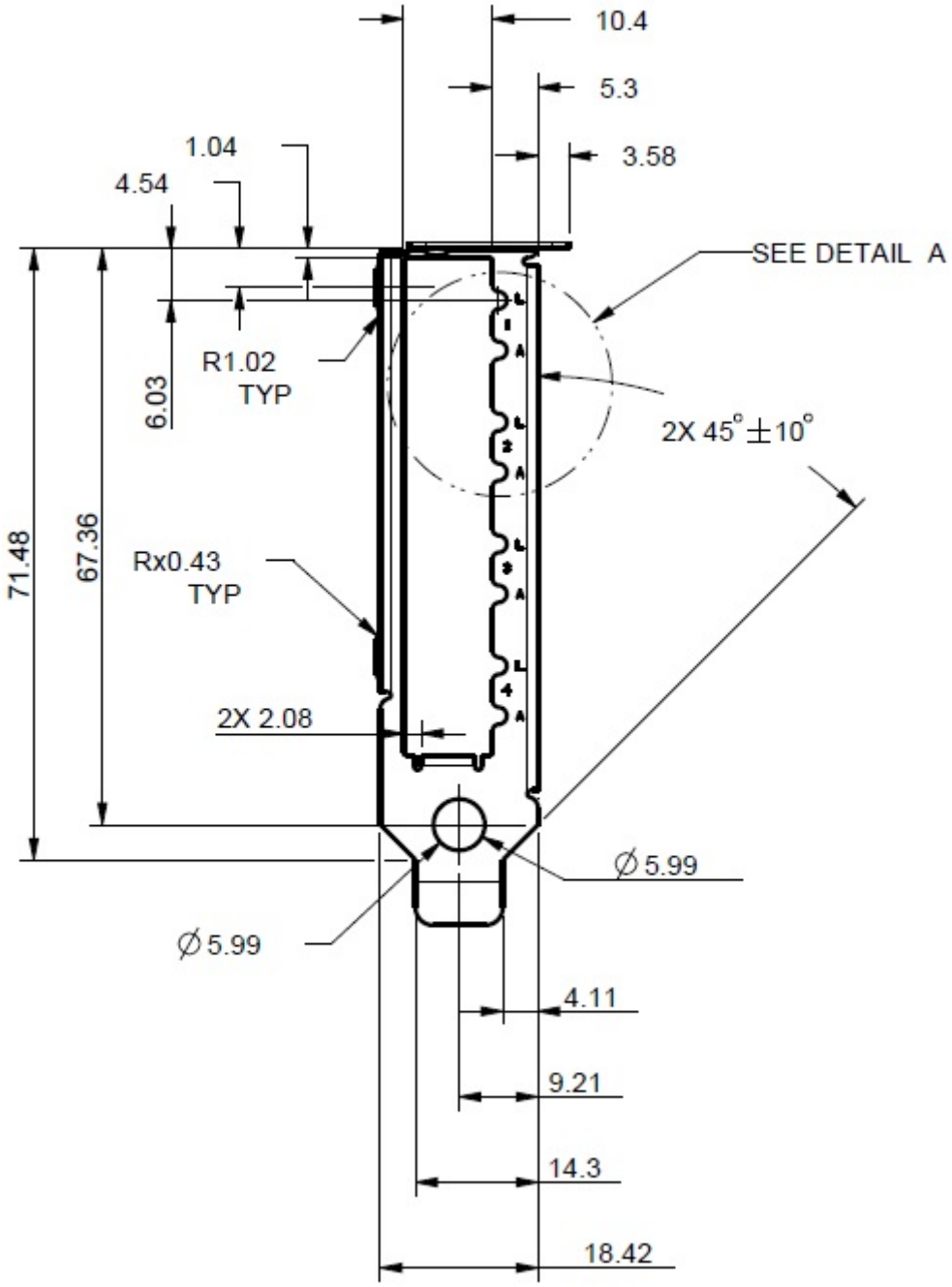

6 Ordering Information

Table 9: Ordering Information

Part Number	Description
BCM957504-P425G	Quad-Port 25 Gb/s SFP28 Ethernet PCI Express 4.0 x16 Network Interface Card, Halogen-Free

Revision History

957504-P425G-DS103; February 7, 2022

Updated:

- SMBus Interface – Updated description.
- Table 1, LED Functions – Changed Link to Activity.

957504-P425G-DS102; August 20, 2021

Updated:

- Board Power and Environmental Specifications – Updated the entire section.

957504-P425G-DS101; November 6, 2020

Updated:

- Board Physical Dimensions – Updated to add information on board dimensions and tolerances.

957504-P425G-DS100; October 7, 2019

Initial release.

Broadcom, the pulse logo, Connecting everything, TruFlow, Avago Technologies, Avago, and the A logo are among the trademarks of Broadcom and/or its affiliates in the United States, certain other countries and/or the EU.

Copyright © 2019 – 2022 Broadcom. All Rights Reserved.

The term “Broadcom” refers to Broadcom Inc. and/or its subsidiaries. For more information, please visit www.broadcom.com.

Broadcom reserves the right to make changes without further notice to any products or data herein to improve reliability, function, or design. Information furnished by Broadcom is believed to be accurate and reliable. However, Broadcom does not assume any liability arising out of the application or use of this information, nor the application or use of any product or circuit described herein, neither does it convey any license under its patent rights nor the rights of others.