Data Sheet

BCM957414A4142CC

Dual-Port 25 Gb/s SFP28 Ethernet PCI Express 3 x8 Network Interface Card

General Description

The Broadcom® BCM957414A4142CC is a dual-port 25 Gb/s, PCI-Express Gen3 x8 Network Interface Card that supports both SFP28/SFP+ optical modules and copper-direct attach cable. The card uses the Broadcom BCM57414 25GbE MAC controller with the integrated dual-channel 25GbE SFI transceiver.

Features

- Dual-port pluggable media interface, which may be equipped with 25G SFP28 or 10G SFP+ optical transceiver or with copper direct-attach cable.
- Fully compliant with the SFF-8402 standard.
- x8 PCI Express v3.0 compliant.
- SR-IOV with up to 128 VFs.
- Function Level Reset (FLR) support.
- TruFlow™ flow processing engine.
- Virtual Network Termination–VXLAN, NVGRE, Geneve, GRE encap/decap.
- vSwitch acceleration.
- Tunnel-aware stateless offloads.
- DCB support: PFC, ETS, QCN, DCBx.
- RDMA over converged Ethernet (RoCE).
- SMBus 2.0.
- MCTP over SMBus.
- PCIe-based UART and KCS.
- Jumbo frames up to 9 KB.
- Advanced Congestion Avoidance.
- Multiqueue, NetQueue, and VMQ.
- IPv4 and IPv6 offloads.
- TCP, UDP, and IP checksum offloads.
- Large Send Offload (LSO).
- Large Receive Offload (LRO).
- TCP Segmentation Offload (TSO).
- Receive-side Scaling (RSS).
- Transmit-side Scaling (TSS).
- VLAN insertion/removal.
- Interrupt coalescing.
- Network boot-PXE, UEFI.
- iSCSI boot.
- MSI and MSI-X
- Conforms to the PCI Express Card Electromechanical Specification Rev. 3.0.

Applications

Dual-Port 25 Gb/s Ethernet Network Interface Card for Data Centers or Cloud Computing.

Figure 1: BCM957414A4142CC Network Interface Card

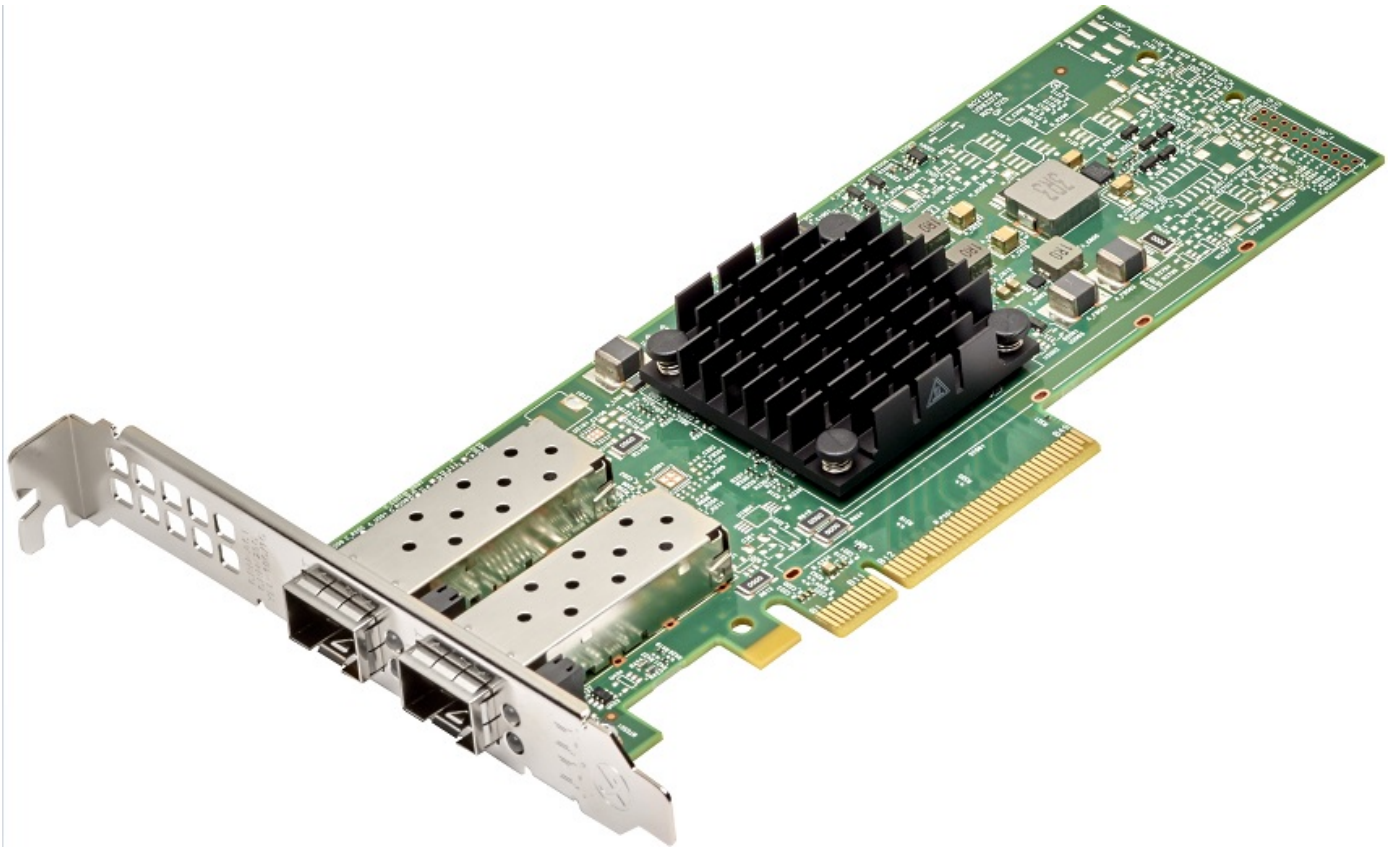

NOTE: The surface markings of the component may not reflect the product received. Broadcom reserves the right to change any component on the printed circuit board with the same functionality.

Table of Contents

1 Functional Description 4
1.1 Block Diagram 4
1.2 Host Interface Connector 5
1.3 BCM57414 5
1.4 SMBus Interface 5
1.5 Nonvolatile RAM 6
1.6 Heat Sink 6
1.7 DC/DC Regulators 6
1.8 Power Supplies 6
1.9 LED Functions and Locations 7
2 Regulatory and Safety Approvals 8
2.1 Regulatory 8
2.2 Safety 8
2.3 Electromagnetic Compatibility (EMC) 8
2.4 Electrostatic Discharge (ESD) Compliance 9
2.5 FCC Statement 9
3 Board Power and Environmental Specifications 10
4 Package Weight 11
5 Physical and Electrical Specifications 11
5.1 Board Physical Dimensions 11
5.2 Bracket Outlines and Dimensions 12
5.3 Standard-Profile Bracket Outline and Dimensions 12
5.4 Low-Profile Bracket Outline and Dimensions 13
6 Label Information 14
7 Ordering Information 14
Revision History **15**

1 Functional Description

This section provides the functional description of the BCM957414A4142CC network interface card.

1.1 Block Diagram

Figure 2 shows the main functional blocks on the BCM957414A4142CC network interface card.

Figure 2: BCM957414A4142CC Block Diagram

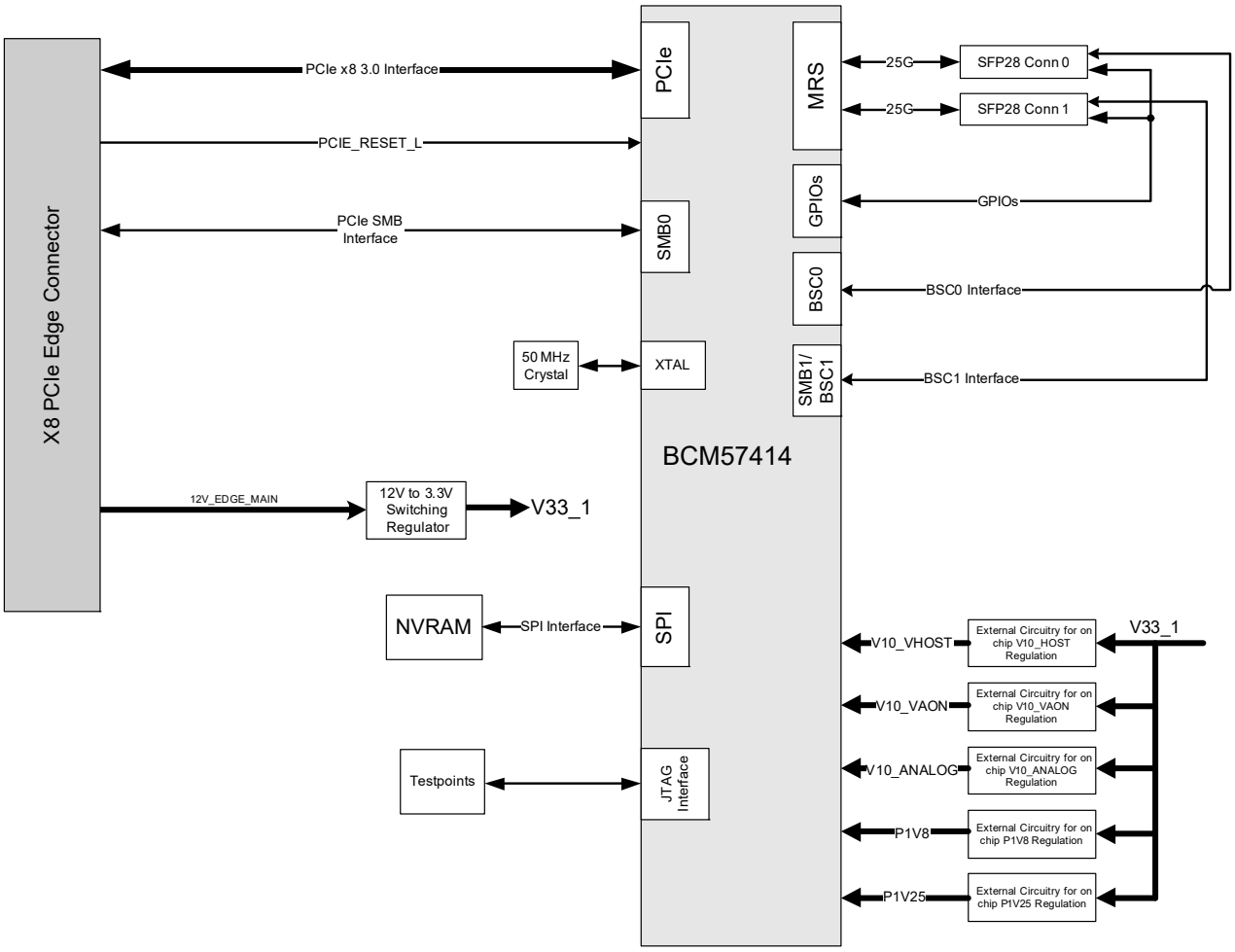

1.2 Host Interface Connector

The BCM957414A4142CC NIC is a PCI Express 3 x8 add-in card with standard height bracket. The card edge connector complies with the PCI Express 3 x8 standard pinout for add-in cards outlined in the PCI Express Electromechanical Specification v3.0 Section 6.1, Table 6-1.

The PCI Express interface is Gen3 compliant.

NOTE: Refer to Section 6 of the PCI Express Electromechanical Specification v3.0 for more details on the card edge connector pinout, and Section 9 for add-in card mechanical information.

1.3 BCM57414

The BCM57414 Ethernet Controller is configured as dual-port 25 Gb/s MAC with integrated SFP28 interface to the line side and x8 PCI Express v3.0 interface to the system host.

1.4 SMBus Interface

The BCM57414 Ethernet Controller SMB0 interface supports serial communications between BCM57414 and the system. The interface allows the Ethernet Controller to act as a SMBus primary or a secondary device.

1.5 Nonvolatile RAM

The BCM57414 Ethernet Controller requires a nonvolatile serial flash memory (NVRAM) to store the device firmware, PCI Configuration space settings (for example, Device ID, Vendor ID), MAC address, and so on. After power-up, the firmware is downloaded into the device memory and executed by the on-chip processor.

1.6 Heat Sink

The passive heat sink is attached to the Ethernet Controller using four spring-loaded push pins that insert into four mounting holes.

1.7 DC/DC Regulators

The onboard voltage regulators use the 12V edge main power from the host interface connector to derive the necessary power rails for different circuits and components on the board.

1.8 Power Supplies

All power is derived from the PCI Express Host Interface Connector 12V supply pins. These voltage supply pins feed on-board regulators that provide the necessary power to the various components on the card. The NIC has six switching regulators, which power the card's various +1.0V, +1.25V, +1.8V, and +3.3V loads. The 3.3V power (+3.3V) and 3.3V auxiliary power (3.3Vaux) from the PCIe edge connector are also used to supply the power control logic and signals.

1.9 LED Functions and Locations

The SFP28 port supports two LEDs to indicate traffic activities and link speed. The LEDs are visible through the cutout on the bracket as shown in Figure 3. The LED functionality is described in Table 1.

Figure 3: Activity and Link LED Locations

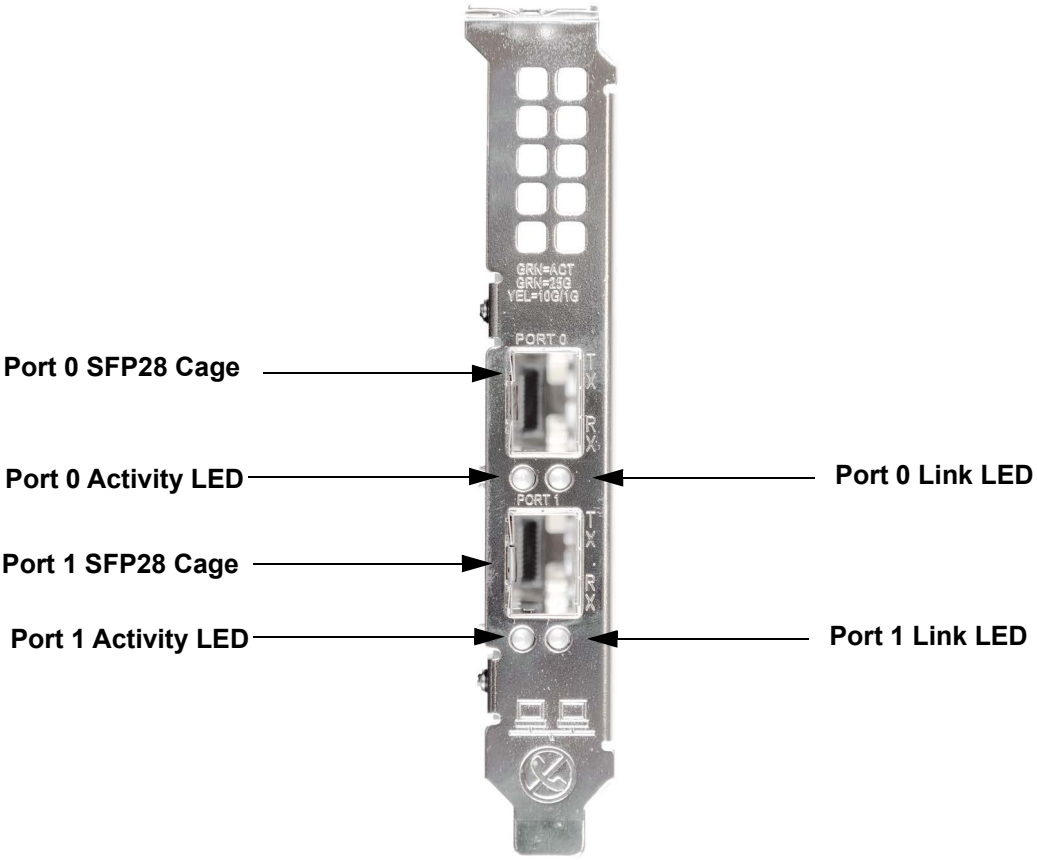

NOTE: The surface markings of the component may not reflect the product received. Broadcom reserves the right to change any component on the printed circuit board with the same functionality.

Table 1: LED Functions

NVRAM Manufacturer	Device	Mbit
Activity	Off	No Activity
	Green blinking	Traffic Flowing Activity
Link	Off	No Link
	Green	Linked at 25 Gb/s
	Yellow	Linked at 10 Gb/s or 1 Gb/s

2 Regulatory and Safety Approvals

The following sections detail the Regulatory, Safety, Electromagnetic Compatibility (EMC), and Electrostatic Discharge (ESD) standard compliance for the BCM957414A4142CC Network Interface Card.

2.1 Regulatory

Table 2: Regulatory Approvals

Item	Applicable Standard	Approval (A)/Certificate (C)
CE/European Union	EN 62368-1:2014	CB report and certificate
UL/USA	IEC 62368-1 (ed. 2)	CB report and certificate

2.2 Safety

Table 3: Safety Approvals

Country	Certification Type/Standard	Compliance
International	CB Scheme ICES 003 – Digital Device UL 1977 (connector safety) UL 796 (PCB wiring safety) UL 94 (flammability of parts)	Yes

2.3 Electromagnetic Compatibility (EMC)

Table 4: Electromagnetic Compatibility

Standard/Country	Certification Type	Compliance
CE/EU	EN 55032:2012/AC:2013 Class B EN 55024:2010 EN 61000-3-2:2014 EN 61000-3-3:2013	CE report and CE DoC
FCC/USA	CFR47 Part 15 Subpart B Class B	FCC/IC DoC and EMC report referencing FCC and IC standards
IC/Canada	ICES-003 Class B	FCC/IC DoC and report referencing FCC and IC standards
ACA/Australia, New Zealand	AS/NZS CISPR 22:2009 +A1:2010	ACA certificate
BSM/Taiwan	CNS 13438 (2006) Class B	BSMI certificate
BSMI/Taiwan	CNS 15663	BSMI certificate/RoHS table
MSIP/S. Korea	KN32 Class B KN35	Korea certificate MSIP mark
VCCI/Japan	VCCI V-3 (2015-04)	Copy of VCCI online certificate

2.4 Electrostatic Discharge (ESD) Compliance

Table 5: ESD Compliance Summary

Standard	Certification Type	Compliance
EN 55024:2010 (EN 61000-4-2)	Air/Direct discharge	Yes

2.5 FCC Statement

This equipment has been tested and found to comply with the limits for a Class B digital device, pursuant to Part 15 of the FCC Rules. These limits are designed to provide reasonable protection against harmful interference in a residential installation. This equipment generates uses and can radiate radio frequency energy and, if not installed and used in accordance with the instructions, may cause harmful interference to radio communications. However, there is no guarantee that interference will not occur in a particular installation. If this equipment does cause harmful interference to radio television reception, which can be determined by turning the equipment off and on, the user is encouraged to try to correct the interference by one or more of the following measures:

- Reorient or relocate the receiving antenna.
- Increase the separation between the equipment and receiver.
- Consult the dealer or an experienced radio/TV technician for help.

NOTE: Changes or modifications not expressly approved by the manufacturer responsible for compliance could void the user’s authority to operate the equipment.

3 Board Power and Environmental Specifications

Table 6 provides the adapter power consumption.

Table 6: Adapter Power Consumption

Adapter Power[a]	Passive DAC Cable	Optical Transceiver[b]
Typical – 50% Ethernet traffic	10.9W	12.5W
Max – 100% Ethernet traffic	11.1W	12.9W

a. Power consumption of adapter at 55°C ambient temperature.

b. Power consumption of adapter is measured using a Broadcom AFBR-735SMZ power level 1 optical transceiver. The total adapter power may vary with different optical transceivers.

Table 7 provides the adapter environmental specifications. The system designer may deploy methods to monitor the BCM57414 junction temperature (T_j) and provide sufficient airflow for keeping T_j below 105°C during normal operation. The Broadcom AFBR-735SMZ active transceiver is recommended for the application.

Table 7: Adapter Environmental Specifications

Airflow	Ambient Temperature	Passive DAC Cable	Optical Transceiver[a]
Hot Aisle	55°C	50 LFM	150 LFM
Storage Humidity	Relative Humidity Range (Non-condensing) maximum 90% at 35°C		
Storage Temperature	–40°C to 70°C		
Operating Temperature	0°C to 55°C		

a. Airflow requirements are measured using a Broadcom AFBR-735SMZ (power level 1, commercial temp [70°C]) optical transceivers. Check the airflow requirements of the selected optical transceivers to ensure adequate cooling to the optical transceivers.

4 Package Weight

Table 8 shows the BCM957414A4142CC package weight (excluding optical module).

Table 8: Package Weight

Parameter	Symbol	Value	Unit
BCM957414A4142CC weight	g	78	gram

5 Physical and Electrical Specifications

This section outlines the mechanicals of the BCM957414A4142CC Network Interface Card as well as the Environmental Specifications.

5.1 Board Physical Dimensions

The BCM957414A4142CC board dimensions are shown in Figure 4. The dimensions are in inches with a tolerance of ±0.005 inches.

Figure 4: Board Physical Dimensions

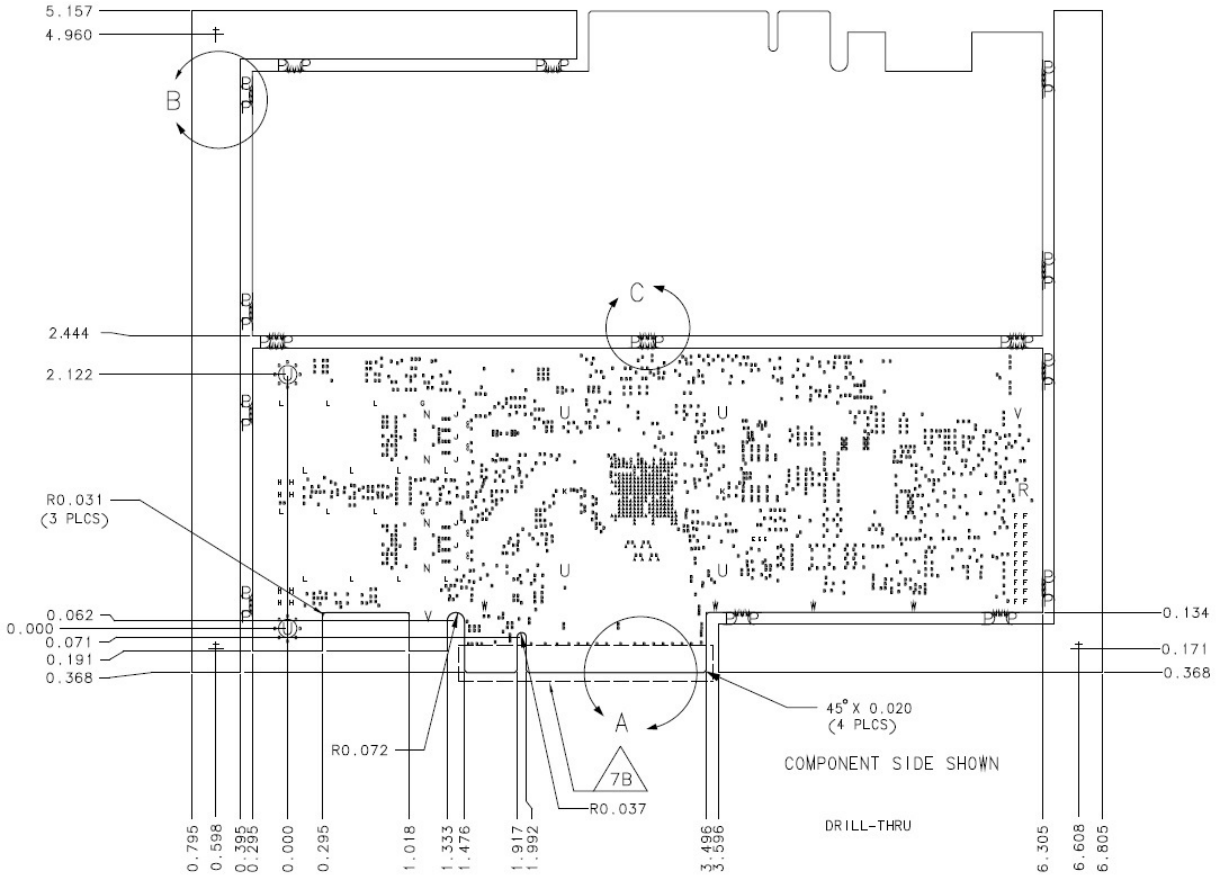

5.2 Bracket Outlines and Dimensions

The BCM957414A4142CC supports both standard and low-profile brackets.

5.3 Standard-Profile Bracket Outline and Dimensions

Standard-profile bracket outline and physical dimensions are shown in Figure 5.

Figure 5: Standard-Profile Bracket Outline and Dimensions

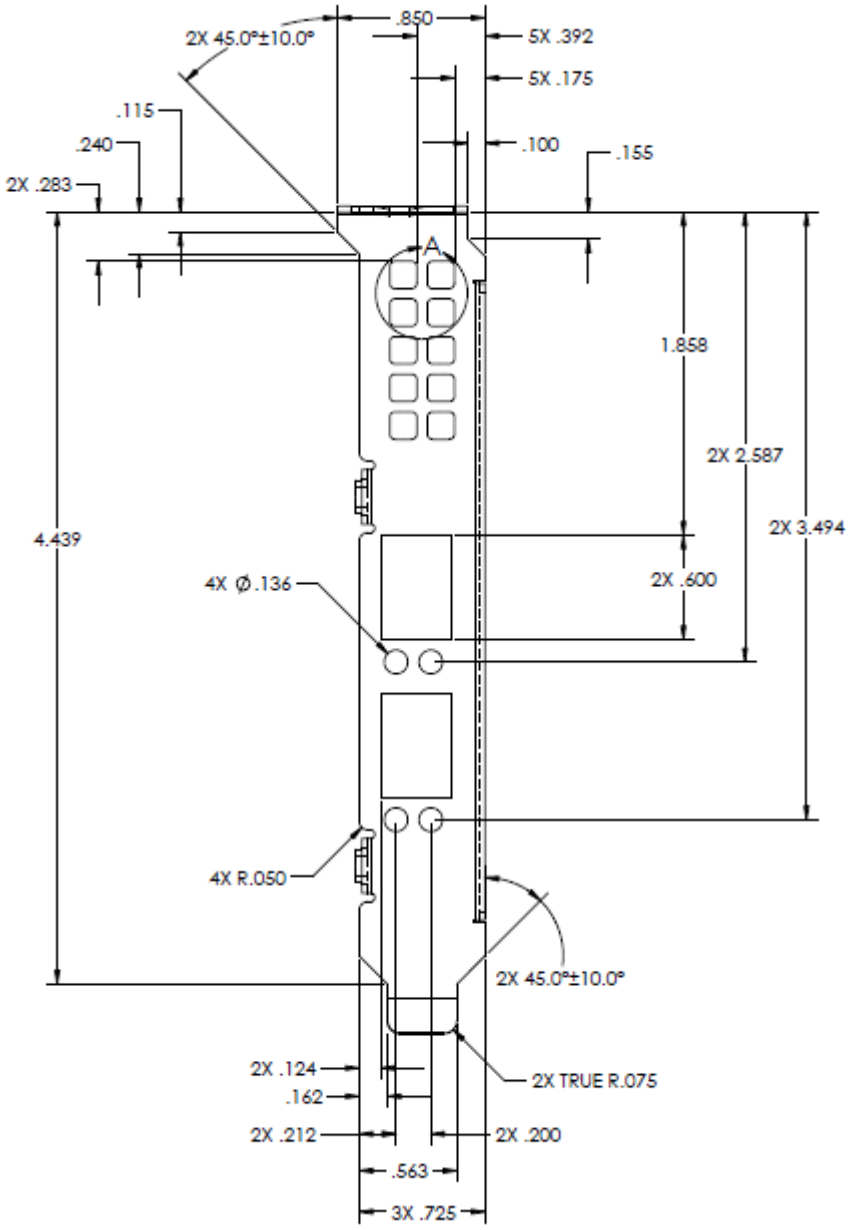

5.4 Low-Profile Bracket Outline and Dimensions

A low-profile bracket outline and physical dimensions are shown in Figure 6.

Figure 6: Low-Profile Bracket Outline and Dimensions

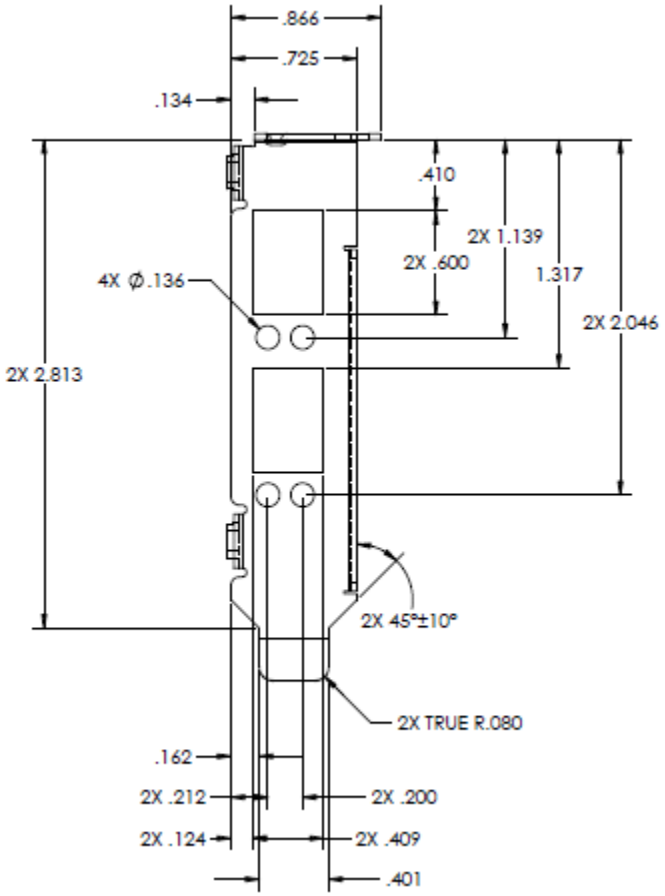

6 Label Information

This section provides the label information of the BCM957414A4142CC network interface card. Figure 7 highlights the labels of Product Factory ID, MAC Address, and Serial Number, as well as their corresponding locations.

Figure 7: Labels Overview

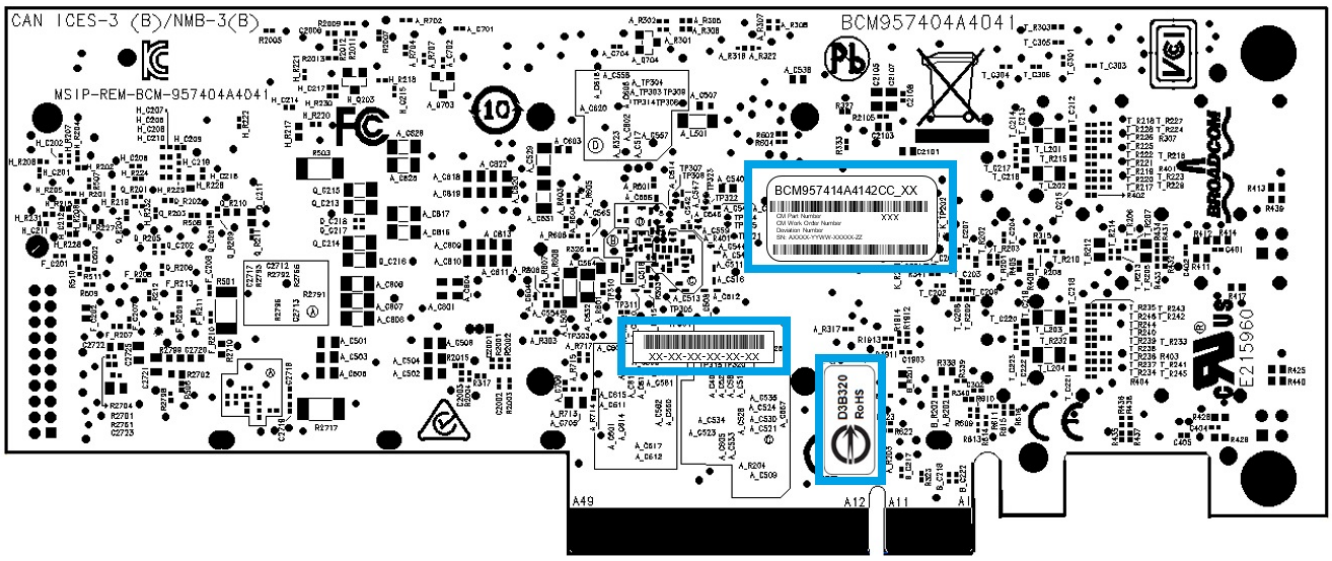

NOTE: Figure 7 is used for label locations only. The surface markings of the component may not reflect the product received. Broadcom reserves the right to change the label information on the printed circuit board with the same device functionality.

7 Ordering Information

Table 9: Ordering Information

Part Number	Description
BCM957414A4142CC	Dual-Port 25 Gb/s SPF28 Ethernet PCI Express Network Interface Card; RoHS-compliant

Revision History

957414A4142CC-DS109; March 23, 2022

Updated:

- SMBus Interface – Updated description.

957414A4142CC-DS108; September 2, 2021

Updated:

- Board Power and Environmental Specifications – Updated section.

957414A4142CC-DS107; July 9, 2020

Updated:

- Figure 1, BCM957414A4142CC Network Interface Card – Replaced photo.

957414A4142CC-DS106; June 12, 2020

Updated:

- Label Information – Replaced label figure.

Added:

- Note for additional information on component surface markings in Figure 1.
- Board Power Consumption
- Airflow Requirements
- Package Weight

957414A4142CC-DS105; July 6, 2018

Updated:

- Figure 7, Labels Overview

957414A4142CC-DS104; February 14, 2018

Updated:

- Figure 1, BCM957414A4142CC Network Interface Card

Added:

- Label Information

957414A4142CC-DS103; December 26, 2017

- Regulatory and Safety Approvals

957414A4142CC-DS102; November 15, 2017

- Figure 4, Board Physical Dimensions

957414A4142CC-DS101; October 24, 2017

- Board Physical Dimensions

957414A4142CC-DS100; March 30, 2017

Initial release.

Broadcom, the pulse logo, Connecting everything, TruFlow, Avago Technologies, Avago, and the A logo are among the trademarks of Broadcom and/or its affiliates in the United States, certain other countries and/or the EU.

Copyright © 2017-2022 Broadcom. All Rights Reserved.

The term “Broadcom” refers to Broadcom Inc. and/or its subsidiaries. For more information, please visit www.broadcom.com.

Broadcom reserves the right to make changes without further notice to any products or data herein to improve reliability, function, or design. Information furnished by Broadcom is believed to be accurate and reliable. However, Broadcom does not assume any liability arising out of the application or use of this information, nor the application or use of any product or circuit described herein, neither does it convey any license under its patent rights nor the rights of others.