Vertical Cable Managers with Finger Ducts Datasheet

Meet greater demands on the physical infrastructure to help manage growing cable densities and larger network equipment.

Vertical Cable Managers with Finger Ducts

These vertical cable managers with finger ducts meet the needs to maximize space utilization to reduce the capital expenditures while maintaining network reliability and availability. Vertical cable manager cost-effectively organizes, manages and protects cables on the front and rear of the rack or cabinet. Plus, bend radius control helps guard against kinks and snags.

Standards Compliance

- RoHS Compliant
- ISO9001 Certificate

Features

- Maintains bend radius as cables transition.
- Allows easy access to cables for moves, adds and changes.
- Increases the longevity of server and networking equipment interfaces by providing cable strain relief.
- Made of ABS material, solid and durable.

42U 3.5'' Wide Vertical Cable Managers with Finger Duct

42U 3.5'' wide plastic vertical cable managers are designed for use in any EIA standard 19-inch open tray racks.Robust and light-weight construction allows cables to be fully aligned with individual patch panels, maintaining bend radius.Moreover, 42U 3.5'' wide plastic vertical cable managers increase density and frees up valuable floor space to maximize space utilization.

Product Specifications	
Part Number	CMV-SFD42U9W
Style	Finger Duct
No. of Rack Spaces	42U
Type	Single Sided
Backbone Material	Plastic (ABS)
Color	Black
Orientation	Vertical
Included Accessories	Quick Release Bracketsx4, Bracketsx4, M4 Countersunk Head Screws x32, Clip Screws and Nuts x8
Rack System Width	3.5''
Dimensions (HxWxD)	73.5'' x3.5'' x6.00'' (1866.9x88.9x152.6mm)
Application	Matching for 42U/45U Open Rack

45U Vertical Cable Managers with Finger Duct

45U vertical cable managers are designed to manage networking equipment in half the area required by traditional cable management systems. Molded cable management fingers, with integral bend radius control, combine with angled patch panels to eliminate the need for horizontal cable managers.

Product Specifications		
Part Number	CMV-SFD45U5W	CMV-DFD45U5W
Style	Finger Duct with Cover	Finger Duct with Cover
No. of Rack Spaces	45U	45U
Type	Single Sided	Dual Sided
Backbone Material	Plastic (ABS)	Plastic (ABS)
Cover Material	PVC	PVC
Color	Black	Black
Orientation	Vertical	Vertical
Detachable Cover	Yes	Yes
Included Accessories	Brackets x4, M6*15mm Screw x8 and M6 Nut x8	Brackets x4, M6*15mm Screw x8 and M6 Nut x8
Rack System Width	19.23"	19.23"
Dimensions (HxWxD)	83"x4.9"x6.5" (2108x125x165mm)	83"x4.9"x12" (2108x125x310mm)
Application	Matching for 45U Open Rack	Matching for 45U Open Rack

5U 3'' Wide Vertical Cable Managers with Finger Duct

5U 3'' wide plastic vertical cable managers are light in weight, this type of bracket can be installed in specific areas of the rack, rather than along its entire height. Moreover, it can be stacked to reach any height(U), so it can be an alternative of higher vertical cable management.

Product Specifications	
Part Number	CMV-5U3W
Style	Finger Duct
No. of Rack Spaces	5U
Type	Single Sided
Backbone Material	Plastic (ABS)
Color	Black
Orientation	Vertical
Included Accessories	M6*15mm Screw x4 and M6 Nut x4
Rack System Width	3.0''
Dimensions (HxWxD)	8.7"x3.3"x1.0" (222x84x25.3mm)
Application	Matching for All Standard Racks or Cabinets

PART NUMBER	CBLE CAPACITY				
	CAT5E 24AWG-5.5mm	CAT6 24AWG-6.1mm	CAT6 SLIM 28AWG-3.8mm	CAT6A/CAT7 26AWG-6.2mm	CAT8 28AWG-6.2mm
CMV-5U3W	208	188	442	180	180
CMV-SFD45U5W	3825	2745	7659	2700	2700
CMV-DFD45U5W	7650	5490	15390	5400	5400

Note:
The managers can be used with copper, fiber and etc. And the above capacity of coppers are theoretical values for reference only.

Technical Drawing

CMV-SFD42U9W

Back View

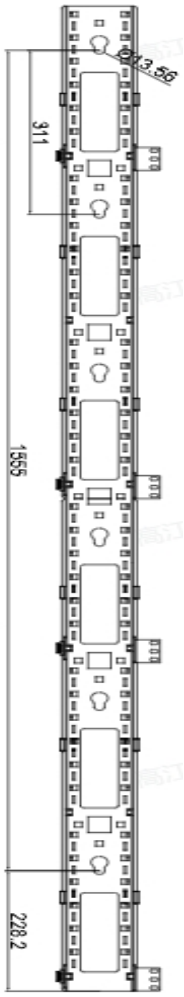

Side View

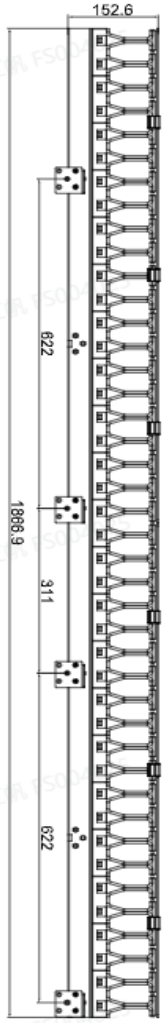

Cover Back View

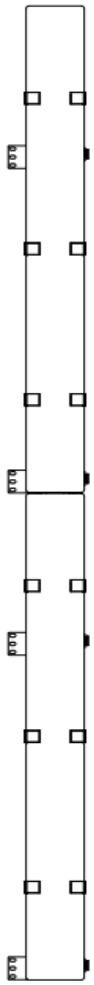

Note:

- CMV-SFD42U9W is made of two same parts of above dimension and its height is 73.5" (1866.9mm).
- Dimensions are in inches. (Dimensions in parentheses are in millimeters).

Technical Drawing

CMV-SFD45U5W

Back View

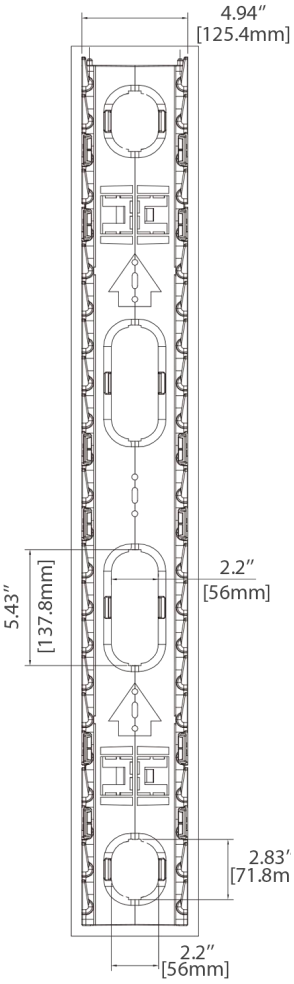

Side View

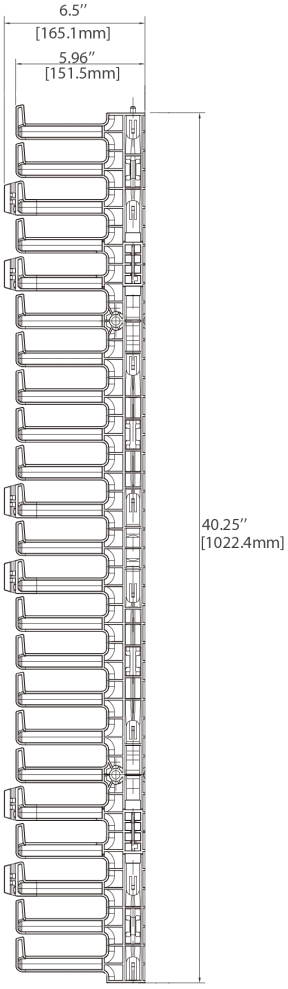

Cover Back View

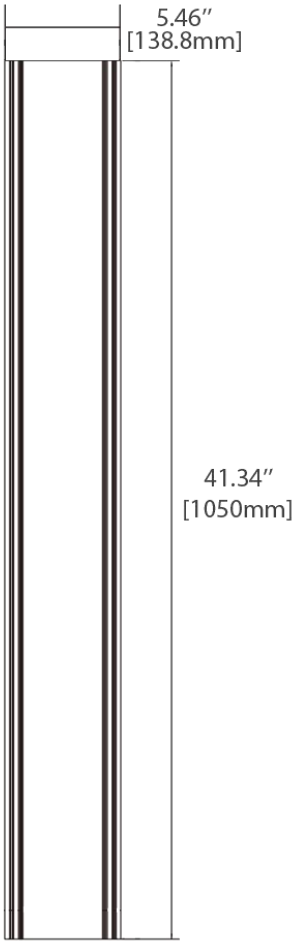

Note:

- CMV-SFD45U5W is made of two same parts of above dimension and its height is 83" (2108mm).
- Dimensions are in inches. (Dimensions in parentheses are in millimeters).

Technical Drawing

CMV-DFD45U5W

Back View

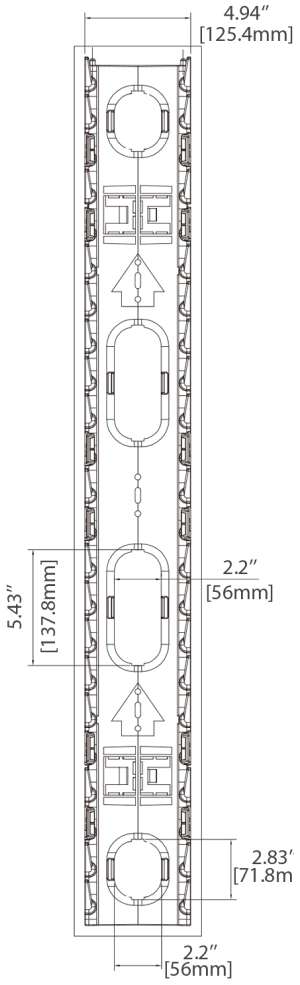

Side View

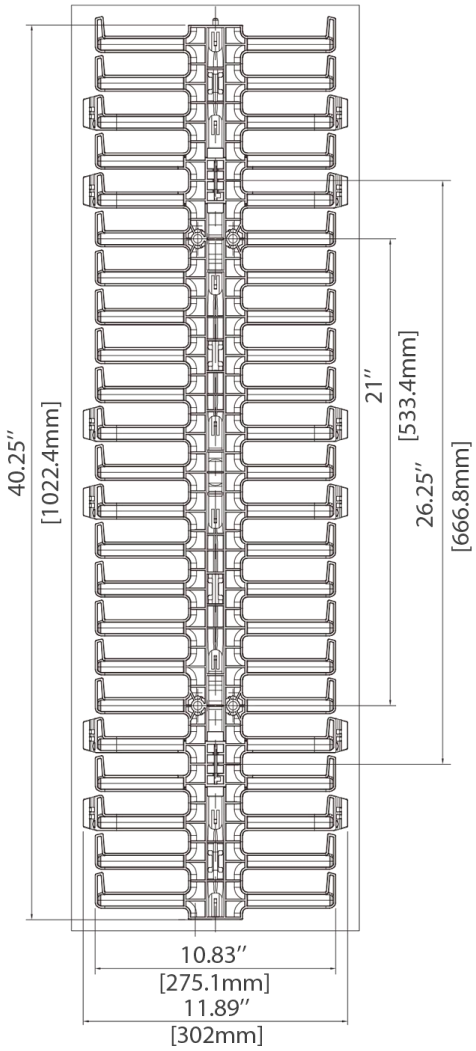

Cover Back View

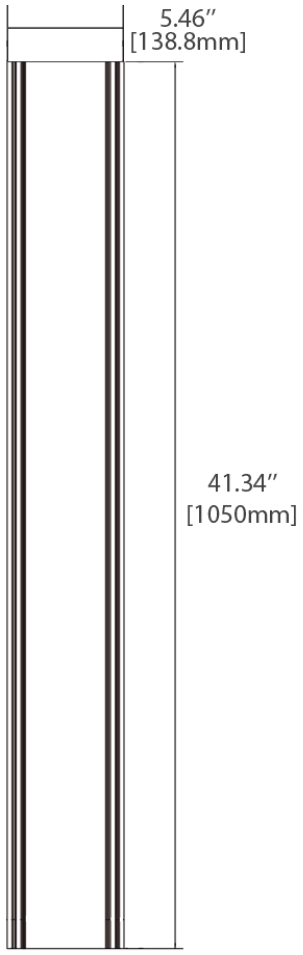

Note:

- CMV-DFD45U5W is made of two same parts of above dimension and its height is 83" (2108mm).
- Dimensions are in inches. (Dimensions in parentheses are in millimeters).

Technical Drawing

CMV-5U3W

Side View

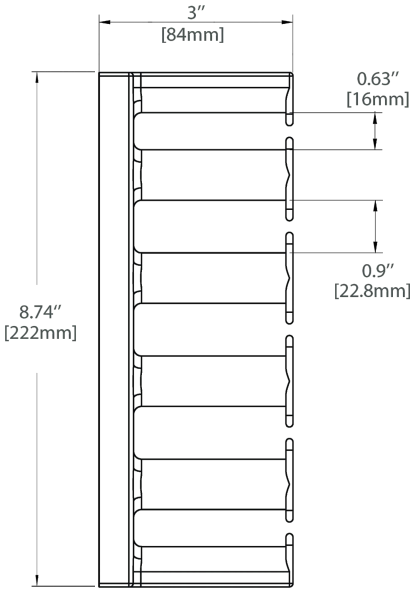

Top View

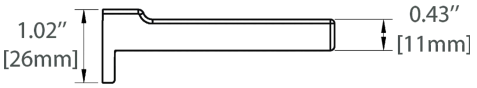

Dimensions are in inches. (Dimensions in parentheses are in millimeters).

Product List

I. Vertical Cable Manager List

Item No.	ID	Description
1	#63033	45U 4.9" Wide Plastic Single Sided Vertical Cable Manager, (2) 22.5U Sections with Cover
2	#63030	45U 4.9" Wide Plastic Dual Sided Vertical Cable Manager, (2) 22.5U Sections with Cover
3	#64186	5U 3'' Wide Plastic Vertical Cable Manager with Bend Radius Finger
4	#73094	1.6'' Single D-ring Vertical Cable Manager with M6 Model Screws and Nuts
5	#73093	3'' Single D-ring Vertical Cable Manager with M6 Model Screws and Nuts
6	#188944	42U 3.5" Wide Plastic Single Sided Vertical Cable Manager

II. Matching Product List

Item No.	ID	Description
1	#70595	3ft (0.9m) Cat6 Snagless Unshielded (UTP) PVC CM Ethernet Network Patch Cable, Blue
2	#70664	2ft (0.6m) Cat6a Snagless Shielded (SFTP) PVC CMX Ethernet Network Patch Cable, Blue
3	#63440	1ft (0.3m) Cat6 Snagless Unshielded (UTP) PVC CM Slim Ethernet Network Patch Cable, Blue
4	#40191	1m (3ft) LC UPC to LC UPC Duplex OS2 PVC (OFNR) 2.0mm Fiber Optic Patch Cable
5	#68017	1m (3ft) MTP® Female Type B Plenum (OFNP) OM4 (OM3) 50/125 Elite Trunk Cable
6	#29015	25pcs/Bag 10in.L x 0.5in.W T type Reusable Cable Ties-Colorful