8ch Dual Fiber C29-C36 DWDM Mux Demux with Expansion and Monitor Port

FHD Plug-in Module, LC/UPC
Data Center & Cloud Computing Infrastructure Solutions

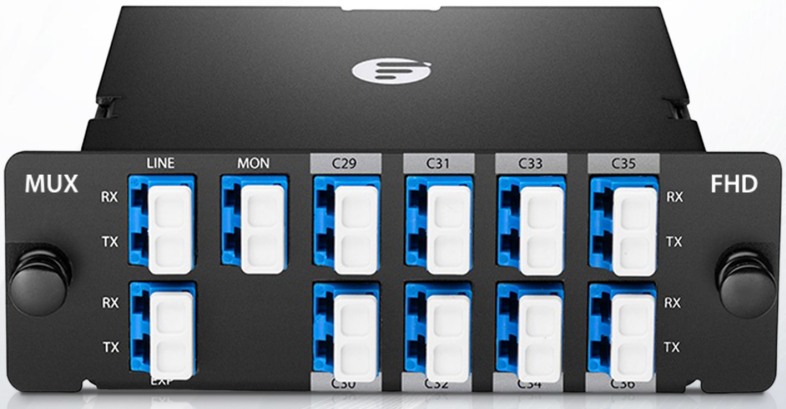

Overview

The 8ch DWDM Mux Demux is a high density, scalable, low loss passive device based on TFF((Thin Film Filter) technology. With modular design, it can be combined with CWDM/DWDM modules, OADMs and MTP cassettes in 1U FHD enclosures to save data center cabinet space.

In conjunction with the transponders and amplifiers, the 8ch DWDM Mux Demux supports a wide range of architectures from simple point-to-point to amplified ring configurations.

Benefits

- Modularization, high density, saving data center cabinet space
- Mix CWDM/DWDM Mux Demux, OADMs and MPO Cassettes in 1U FHD enclosures
- 1% monitor port for easy troubleshooting without downtime
- Expansion port for future capacity expansion
- High quality thin film filter technology
- Passive, no electricity needed (MTBF ca. 500 years)

Front Panel and Port Description

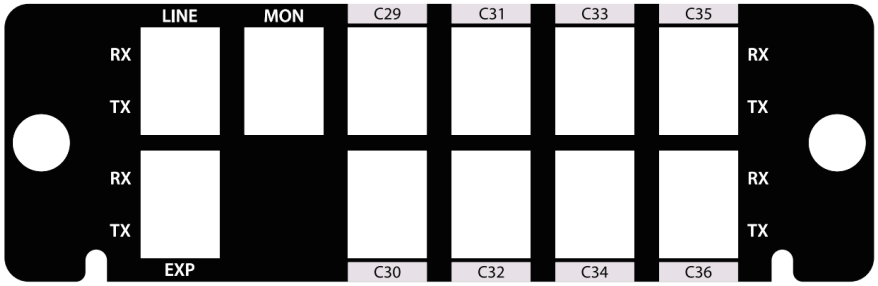

LINE	MON	EXP
Line interface for common signal	1% Monitoring for easy troubleshooting	Expansion for add additional channels

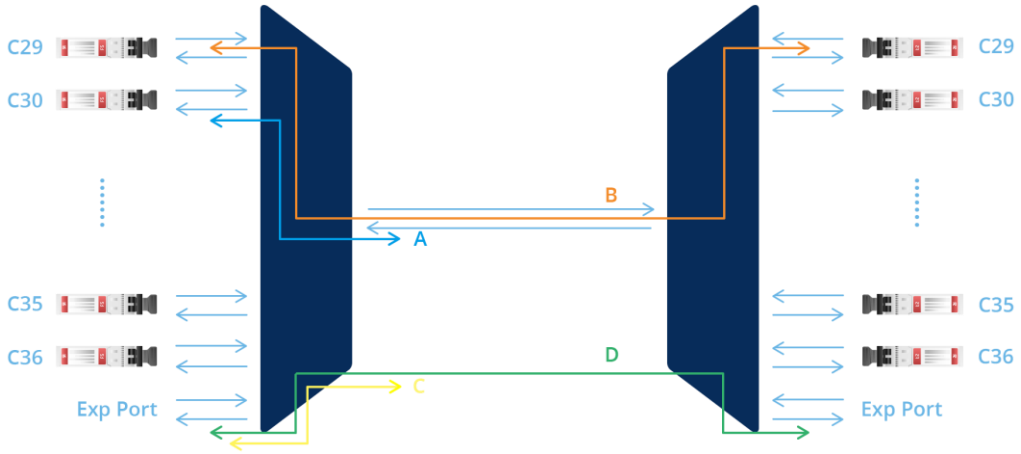

Technical Specification

Parameter	Value
ITU Channel	8CH C29-C36
Operating Wavelength	1520-1570nm
Channel Passband	ITU ± 0.11
Channel Passband (Exp port)	1500~1547.91 & 1554.73~1620nm
Insertion Loss, Per Channel (A)	≤ 2.8dB
Link Loss, Per Channel (B)	≤ 4.2dB
Insertion Loss, Expansion Port (C)	≤ 1.0dB
Link Loss, Expansion Ports (D)	≤ 2.0dB

Parameter	Value
Channel Spacing	100GHz (0.8nm)
Insertion Loss @ 1% Mon	≤ 24dB
Exp Isolation	≥ 13dB
Adjacent Channel Isolation	≥ 30dB
Non-adjacent Channel Isolation	≥ 40dB
Filter Technology	TFF (Thin Film Filter)
Passband Ripple	≤ 0.5dB
Directivity	≥ 45dB
Return Loss	≥ 45dB
PDL	≤ 0.3dB
PMD	≤ 0.1ps
Power Handling	≤ 500mW
Operating Temperature	-40 ~ +85 ° C
Storage Temperature	-40 ~ +85 ° C
Fiber Type	G657 A1
Connector Type	LC/UPC Connector
Warranty	3 Years
Dimensions (H x W x D)	1.38''x4.29''x4.64'' (35x109x118mm)

Notes:

1.Specified with connectors and adapters.

Network Diagram

Expansion port can be used to connect another DWDM Mux Demux for wavelength expansion, and monitor port can be connected with monitoring devices to test the power of the signal without service interruption, which enables users the ability to monitor and troubleshoot networks.

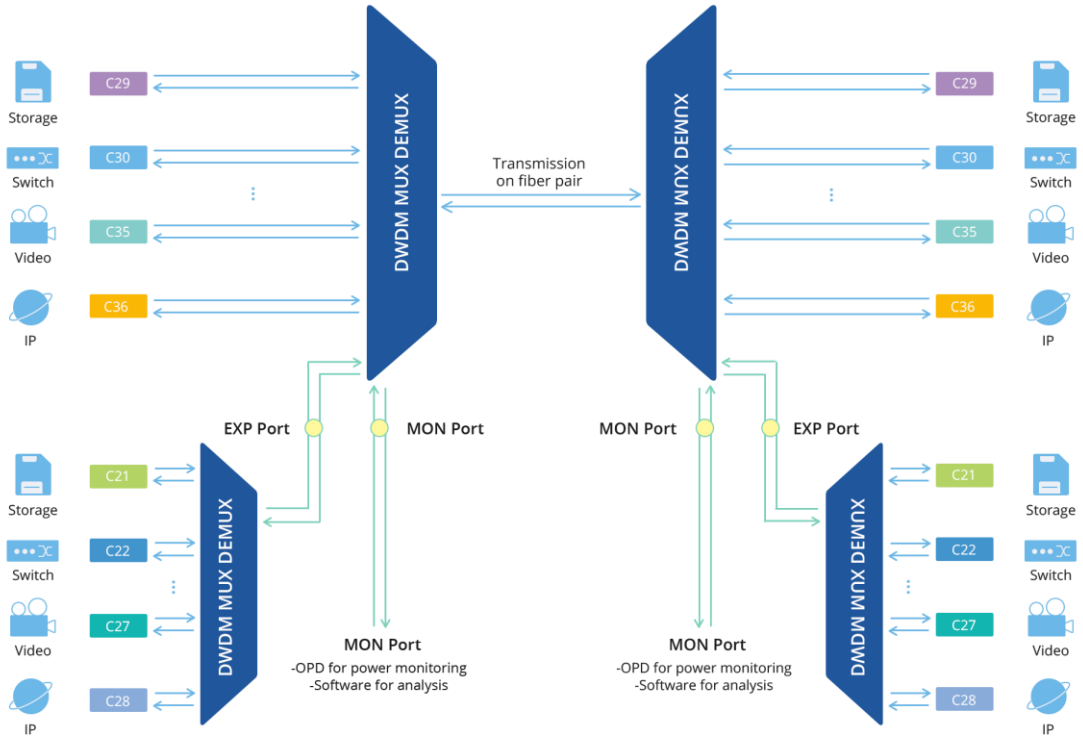

Hybrid CWDM/DWDM System

DWDM wavelengths are within the wavelength range of CWDM, which have much smaller channel spacing, so CWDM wavelengths near DWDM can be used to transmit the DWDM wavelengths. A hybrid C/DWDM system is built to expand the existing CWDM system, keeping initial startup costslow.

CWDM Channels (Bandwidth)	DWDM Channels (Center Wavelength)
1530nm (±6.5nm)	C52-C61 (1528.77 - 1535.82nm)
1550nm (±6.5nm)	C27-C42 (1543.73 - 1555.75nm)

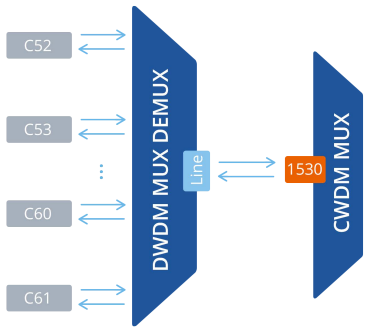

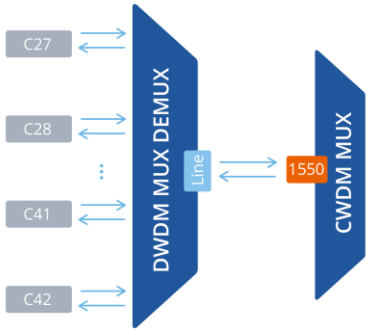

High Quality DWDM Transceivers to Build a Passive DWDM System

FS.COM offers DWDM transceiver modules in SFP, SFP+ and XFP formats. Every optics is tested in real switches and full compatible with Cisco,Juniper, Arista, Brocade, Dell, Extreme, etc.

Transmission distances range from 20-120km for Gigabit speeds, and 40-120km for 10 Gigabit speeds, without the use of optical amplifiers.

DWDM-SFP10G-80

DWDM-XFP10G-80

DWDM-Tunable-XFP

DWDM-Tunable-SFP+

DWDM-SFP1G-ZX

ITU Channel Guiding

ITU Channel (xx or yy)	21	22	23	24	25	26	27	28	29	30	31	32	33	34	35	36	37	38	39	40
Wavelength (nm)	1560.61	1559.79	1558.98	1558.17	1557.36	1556.55	1555.75	1554.94	1554.13	1553.33	1552.52	1551.72	1550.92	1550.12	1549.32	1548.51	1547.72	1546.92	1546.12	1545.32

ITU Channel (xx or yy)	41	42	43	44	45	46	47	48	49	50	51	52	53	54	55	56	57	58	59	60
Wavelength (nm)	1544.53	1543.73	1542.94	1542.14	1541.35	1540.56	1539.77	1538.98	1538.19	1537.40	1536.61	1535.82	1535.04	1534.25	1533.47	1532.68	1531.90	1531.12	1530.33	1529.55

Layout and Dimensions

- Width: 109.00mm (4.29")
- Height: 35.00mm (1.35")
- Depth: 118.00mm (4.64")

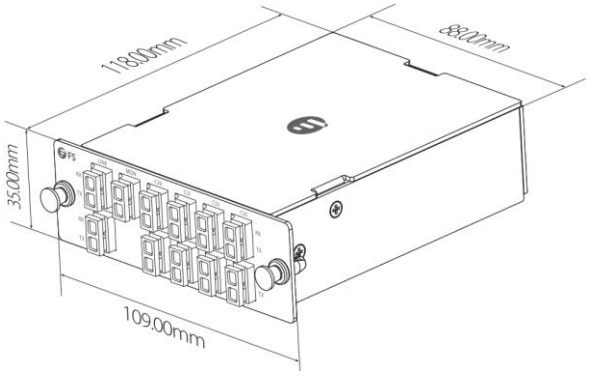

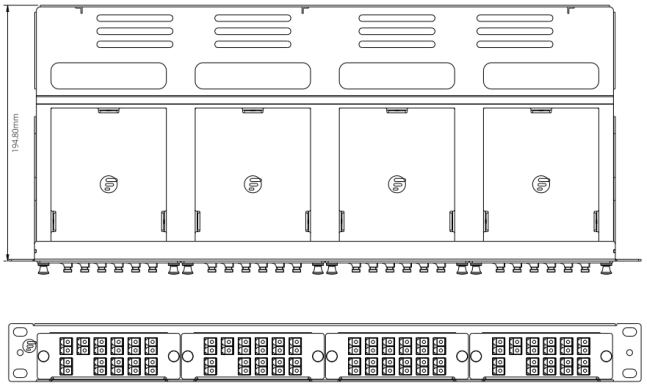

Ordering Information

Mux Demux & OADM		
DWDM MUX DEMUX	FMU-D402160M3	40 Channels 100GHz C21-C60, with 1310nm and Monitor Port, 3.5dB Typical IL, LC/UPC, Dual Fiber DWDM Mux Demux, 1U Rack Mount #35887
	M6200-D2160M	40 Channels 100GHz C21-C60 Dual Fiber DWDM Mux and Demux with Monitor Port, Pluggable Module, LC/UPC, Integrated with M6200 Series Managed Chassis #120424
	FMU-D162136EM3	16 Channels 100GHz C21-C36, with Monitor, Expansion and 1310nm Port, LC/UPC, Dual Fiber DWDM Mux Demux, 1U Rack Mount #72430
	FMU-MD085360EM3	CWDM/DWDM Hybrid Solution, 8 Channels 100GHz C53-C60, with Monitor, Expansion and 1310nm Port, LC/UPC, Dual Fiber DWDM Mux Demux, FMU Plug-in Module #72433
CWDM MUX DEMUX	FMU-C182761M	18 Channels 1270-1610nm, with Monitor Port, LC/UPC, Dual Fiber CWDM Mux Demux, 1U Rack Mount #33489
	FMU-MC084761EM	8 Channels 1470-1610nm, with Monitor and Expansion Port, LC/UPC, Dual Fiber, Low Insertion Loss CWDM Mux Demux, FMU Plug-in Module #78163
LWDM MUX DEMUX	ABS-L042930A	4 Channels 1295.56-1309.14nm, Single Fiber LAN-WDM Mux Demux, Side-A, ABS Pigtailed Module, LC/UPC #97782
	ABS-C062737A	6 Channels 1271-1371nm, Single Fiber CWDM Mux Demux, Side-A, ABS Pigtailed Module, LC/UPC #97784
OADM	DOADM-DF	Customized Dual Fiber & Single Fiber DWDM OADM #70427
	COADM-DF	Customized Dual Fiber & Single Fiber CWDM OADM #70425
Chassis	FMU-1UFMX-N	FMU 2-Slot 1U 19" Rack Chassis Unloaded, holds up to 2 Units FMU Plug-in Module #30408
	FUD-1UFMX-N	FUD 4-Slot 1U 19" Rack Chassis Unloaded, holds up to 4 Units FUD Plug-in Module #106578
TRANSPONDERS & MUXPONDERS		
8x 200G	M6800-TSP16	16x 100G QSFP28 to 8x 200G CFP2 OTN Managed Transport Platform#111053
100G/200G	M6500-TMXP5	2x 100G QSFP28/4x 40G QSFP+ to 1x 200G CFP2 Transponder/Muxponder#111049
10G	M6200-OEO10G	5 Channels WDM Transponder (Converter), 10 SFP/SFP+ Slots#107365
Chassis	M6500-CH2U	2U Managed Chassis Unloaded Platform, Supports 2x 200G Transponder/Muxponder #96454
	M6500-CH5U	5U Managed Chassis Unloaded Platform, Supports 6x 200G Transponder/Muxponder #111050
	M6200-CH2U	2U Managed Chassis Unloaded Platform, Supports 7x Mux/DEMUX/EDFA/OEO/OLP/DCM Cards #107371
	M6200-CH5U	5U Managed Chassis Unloaded Platform, Supports 15x MUX/DEMUX/EDFA/OEO/OLP/DCM Cards #111052

OPEN LINE SYSTEM		
Amplifiers	M6200-25PA	25dB Gain DWDM EDFA Pre-Amplifier, 16dBm Output#107367
	M6200-20BA	20dBm Output DWDM EDFA Booster Amplifer, 16dB Gain#107366
Dispersion Compensation	M6200-DCM40	40KM DCF-based Passive Dispersion Compensation Module#107370
	M6200-DCM80	80KM DCF-based Passive Dispersion Compensation Module#119071
Line Protection	M6200-OLP2	1+1 Optical Line Protection Switch (OLP)#107368
Red/Blue Filter	M6200-RB	1x2 Single Fiber DWDM Red/Blue Filter#107369
VOA Units	M6200-SFPVOA	SFP Variable Optical Attenuator Module#107373
	AT-M-LCU	Fixed Fiber Optic Attenuators #70009
Chassis	M6200-CH2U	2U Managed Chassis Unloaded Platform, Supports 7x Mux/DEMUX/EDFA/OEO/OLP/DCM Cards #107371
	M6200-CH5U	5U Managed Chassis Unloaded Platform, Supports 15x MUX/DEMUX/EDFA/OEO/OLP/DCM Cards #111052
WDM TRANSCEIVERS		
100G/200G CFP2	M-CFP2-DCO	C14 1566.31nm 100G/200G Tunable CFP2-DCO Coherent Transceiver, up to 1000km #120128
25G SFP28	DWDM-SFP25G-10	25G DWDM SFP28 100GHz 1563.86nm 10km DOM LC SMF Optical Transceiver Module #87000
	CWDM-SFP25G-40S	25G 1270nm CWDM SFP28 40km DOM LC SMF Optical Transceiver Module #100112
	CWDM-SFP25G-10SP	25G 1270nm CWDM SFP28 10km DOM LC SMF Optical Transceiver Module #76003
	LWDM-SFP25G-40	25G LWDM SFP28 1286.66nm 40km DOM LC SMF Optical Transceiver Module #93786
16G/8G FC	DWDM-SFP16G-40	Customized 16G DWDM SFP+ C20-C61 100GHz 40km DDM LC SMF Transceiver Module#73084
	DWDM-SFP16GH-40	Customized 16G DWDM SFP+ 50GHz 40km DDM LC SMF Transceiver Module #73085
	CWDM-SFP16G-40	Customized 16G Fiber Channel CWDM SFP+ 1470-1610nm 40km DDM LC SMF Transceiver Module #80765

10G SFP+	DWDM-SFP10G-80	10G DWDM SFP+ 1559.79nm 80km DOM LC SMF Transceiver Module, Commercial Temperature#31237, Industrial Temperature#113562
	DWDM-SFP10G-40	10G DWDM SFP+ 1560.61nm 40km DOM LC SMF Transceiver Module, Commercial Temperature#38731, Industrial Temperature#113511
	DWDM-SFP10G-C	10G DWDM C-band Tunable SFP+ 50GHz 80km DOM LC SMF Transceiver Module #69267
	CWDM-SFP10G-80L	10G CWDM SFP+ 1470nm 80km DOM LC SMF Transceiver Module #19367
	CWDM-SFP10G-40S	10G CWDM SFP+ 1270nm 40km DOM LC SMF Transceiver Module, Commercial Temperature#22168, Industrial Temperature#112392
1G SFP	DWDM-SFP1G-EZX	1000BASE-DWDM SFP 100GHz 1563.86nm 100km DOM LC SMF Transceiver Module #54150
	DWDM-SFP1G-ZX	1000BASE-DWDM SFP 1563.86nm 80km DOM LC SMF Transceiver Module #47697
	CWDM-SFP1G-EZX	1000BASE-CWDM SFP 1270nm 120km DOM LC SMF Transceiver Module #102776
	CWDM-SFP1G-ZX	1000BASE-CWDM SFP 1270nm 80km DOM LC SMF Transceiver Module #33234

*Standard products are listed above. Customized specifications are available upon request.