12Gb/s MSA 1310nm 20km Single Transmitter DOM Transceiver

SFP-12G31-20

Applications

- SMPTE 259M/292M/424M/2081/2082 Compliant Electrical-to-optical Interfaces
- High-density Video Routers

Features

- DFB Laser Diode Transmitter
- Up to 20 Km on 9/125μm SMF
- 3.3V Power Supply
- Simplex LC Optical Interface
- CML Differential Inputs/Outputs and LVTTL Signal Detect
- Support Video Pathological Patterns for SD-SDI, HD-SDI , 3G-SDI , 6G-SDI and 12G-SDI
- Class 1 Laser International Safety Standard IEC 825 Compliant
- Operating Case Temperature: Commercial Temp: 0~70℃
  Industrial Temp: -40~85℃

Description

FS's 12G-SDI SFP series of transmitter modules are the perfect solution for high -speed communication networks. These transmitter modules support data rates up to 12Gbps. The module is fully compliant with Small Form-Factor Pluggable (SFP) Transceiver Multi-Source Agreement (MSA). These transmitter modules provides the system designer with Camera, Video, Security Monitoring and other Fibre Channel applications.

Product Specifications

I. Absolute Maximum Conditions

Parameter	Symbol	Min.	Max.	Unit	Notes
Storage Temperature	T_{ST}	-40	85	℃	
Relative Humidity	RH	5	95	%	
Supply Voltage	V_{CC}	0	3.6	V	

II. Recommended Operating Environment and Electrical Characteristics

Parameter	Symbol	Min.	Typ	Max.	Unit	Notes
Supply Voltage	V_{CC}	3.1	3.3	3.5	V	
Supply Current	Icc			200	mA	
Operating Case Temperature	T_{OP}	0		70	℃	1
		-40		85		2
Data Rate	B	270		12000	Mbps	

Notes:

1. Standard Level
2. Industrial Level

III. Optical Characteristics

3.1 Transceiver Optical Characteristics

Parameter	Symbol	Min.	Typ	Max.	Unit	Notes
			Transmitter			
Data Rate	B	270		12000	Mbps	
Output Center Wavelength	λ_C	1260	1310	1360	nm	
Output Spectral Width (-20dB)	λ			4.0	nm	
Average Optical Output Power	Po	-5		0	dBm	1,2
Extinction Ratio	ER	4			dB	1,2

Notes:

1. The optical power is launched into 9/125μm SMF.
2. With a PRBS 2^{23}-1 test pattern@ 12000Mbps.

3.2 Transceiver Optical Characteristics

Parameter	Symbol	Min.	Typ	Max.	Unit	Notes
			Transmitter			
Data Rate	B	270		12000	Mbps	
Output Center Wavelength	λ_C	1260	1310	1360	nm	
Output Spectral Width (-20dB)	λ			4.0	nm	
Average Optical Output Power	Po	-5		0	dBm	1,2
Extinction Ratio	ER	4			dB	1,2

Notes:

1. The optical power is launched into 9/125μm SMF.
2. With a PRBS 2^{23}-1 test pattern@ 12000Mbps.

IV. Electrical Parameters

Parameter	Symbol	Min.	Typ	Max.	Unit	Notes
Supply Voltage	V_{CC}	3.1	3.3	3.5	V	
Supply Current	I_{CC}			200	mA	
Transmitter						
Differential Input Voltage	Vin	200		2400	mVP-P	
TX_DISABLE	Disable	V_D	2.0		Vcc	V
	Enable	V_{EN}	0		0.8	V
TX_ Fault	Fault	V_F	2.0		V_{CC}	
	Normal	V_N	0		0.8	V

V. Digital diagnostic monitoring Characteristics

Parameter	Symbol	Range	Accuracy	Unit	Note
Temperature	T	Recommended Operation Condition	±3	℃	
Voltage	V_{CC}	Recommended Operation Condition	±3%	V	
Bias Current	I_D	ID:1-100mA, Recommended Operation Condition	±10%	mA	
Tx Power	P_O	PO:min~max, Recommended Operation Condition	±3	dBm	1
Rx Power	P_I	PI:min~max, Recommended Operation Condition	±3	dBm	2

Notes:

1. Single Receiver Not Support.
2. Single Transmitter Not Support.

VI. EEPROM Information Functions

The standard SFP serial ID provides access to identification information that describes the transceiver's capabilities, standard interfaces, manufacturer, and other information.

Additionally, SFP transceivers provide a unique enhanced digital diagnostic monitoring interface, which allows real- time access to device operating parameters such as transceiver temperature, laser bias current, transmitted optical power, and received optical power and transceiver supply voltage. It also defines a sophisticated system of alarm and warning flags, which alerts end - users when particular operating parameters are outside of a factory set normal range.

The SFP MSA defines a 256 byte memory map in E^2PROM that is accessible over a 2- wire serial interface at the 8 bit address 1010000X (A0h). The digital diagnostic monitoring interface makes use of the 8 bit address 1010001X (A2h), so the originally defined serial ID memory map remains unchanged. The interface is identical to, and is thus fully backward compatible with both the GBIC Specification and the SFP Multi Source Agreement. The complete interface is described in "Digital Diagnostics Monitoring Interface for SFP Optical Transceivers".

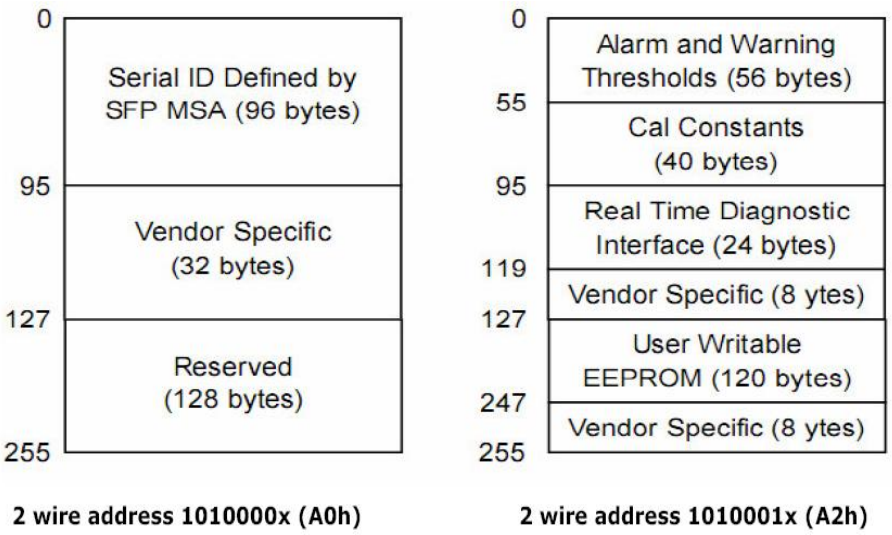

VII. EPROM Serial ID Memory Contents

7.1 Serial ID Memory Map:A0h

Data Address	Size (Byte)	Name of Field	Description
		Base ID Fields	
0	1	Identifier	SFP
1	1	Ext. Identifier	SFP Function is Defined by Serial ID Only
2	1	Connector	LC Connector
3-10	8	Transceiver	Transceiver Codes
11	1	Encoding	NRZ
12	1	BR, Nominal	12000Mbps
13	1	Reserved	

Data Address	Size (Byte)	Name of Field	Description
14	1	Length(9μm)km	Transceiver Transmit Distance
15	1	Length(9μm)100m	
16	1	Length(50μm)10m	
17	1	Length(62.5μm)10m	
18	1	Length(Copper)	Not Compliant
19	1	Reserved	
20-35	16	Vendor Name	SFP Vendor Name: FS
36	1	Reserved	
37-39	3	Vendor OUI	
40-55	16	Vendor PN	Part Number: “12G-SDI SFP”
56-59	4	Vendor rev	3.0
60-61	2	Wavelength	Transceiver Wavelength
62	1	Reserved	
63	1	CC_BASE	Check Code for Base ID Fields

Data Address	Size (Byte)	Name of Field	Description
Extended ID Fields			
64-65	2	Options	TX_FAULT, TX_DISABLE and Loss of Signal Implemented.
66	1	BR, max	
67	1	BR, min	
68-83	16	Vendor SN	Serial number
84-91	8	Date code	Manufactory Date Code
92	1	Diagnostic Monitoring Type	Digital Diagnostic Monitoring Implemented, “Internally Calibrated” is Implemented, RX Measurement Type is “Average Power”.
93	1	Enhanced Options	Optional Alarm/Warning Flags Implemented for all Monitored Quantities, Optional Soft RX_LOS Monitoring Implemented.
94	1	SFF-8472 Compliance	Includes Functionality Described in Rev 9.3 SFF-8472.
95	1	CC_EXT	Check Sum for the Extended ID Fields
Vendor Specific ID Fields			
96-127	32	Vendor Specific	Vendor Specific EEPROM
128-255	128	Reserved	Reserved for SFF-8079

7.2 Serial ID Memory Map:A2h

Data Address	Size (Byte)	Name of Field	Description
0-1	2	Temperature High Alarm	Diagnostic Flag Alarm and Warning Thresholds
2-3	2	Temperature Low Alarm	
4~5	2	Temperature High Warning	
6~7	2	Temperature Low Warning	
8~9	2	VCC High Alarm	
10~11	2	VCC Low Alarm	
12~13	2	VCC High Warning	
14~15	2	VCC Low Warning	
16~17	2	Bias High Alarm	
18~19	2	Bias Low Alarm	
20~21	2	Bias High Warning	
22~23	2	Bias Low Warning	
24~25	2	TX Power High Alarm	
26~27	2	TX Power Low Alarm	
28~29	2	TX Power High Warning	
30~31	2	TX Power Low Warning	
32~33	2	RX Power High Alarm	
34~35	2	RX Power Low Alarm	

Data Address	Size (Byte)	Name of Field	Description
36~37	2	RX Power High Warning	Diagnostic Flag Alarm and Warning Thresholds
38~39	2	RX Power Low Warning	
40~55	16	Unallocated	
56~91	39	Calibration Coefficients	Diagnostic Calibration Constants for Optional External Calibration
92-94		Unallocated	
95	1	Check Sum	Check Sum Byte for 0 to 94
96~97	2	Measured Temperature	Scale: 1/256° C
98~99	2	Measured VCC	Scale: 100uV
100~101	2	Measured Bias Current	Scale: 2uA
102~103	2	Measured TX Power	Scale: 0.1uW
104~105	2	Measured RX Power	Scale: 0.1uW
106~109	4	Reserved	
110	1	Status/Control	Optional Status and Control Bits
111	1	Reserved	Reserved for SFF-8079
112~113	2	Alarm Flags	Diagnostic Alarm Flag Status Bits
116~117	2	Warning Flags	
118~119	2	Ext Status/Control	Diagnostic Warning Flag Status Bits
120~127	8	Vendor Specific	Extended Module Control/Status Bytes
128-247	120	User EEPROM	Vendor specific memory addresses

VIII. Pin Definitions

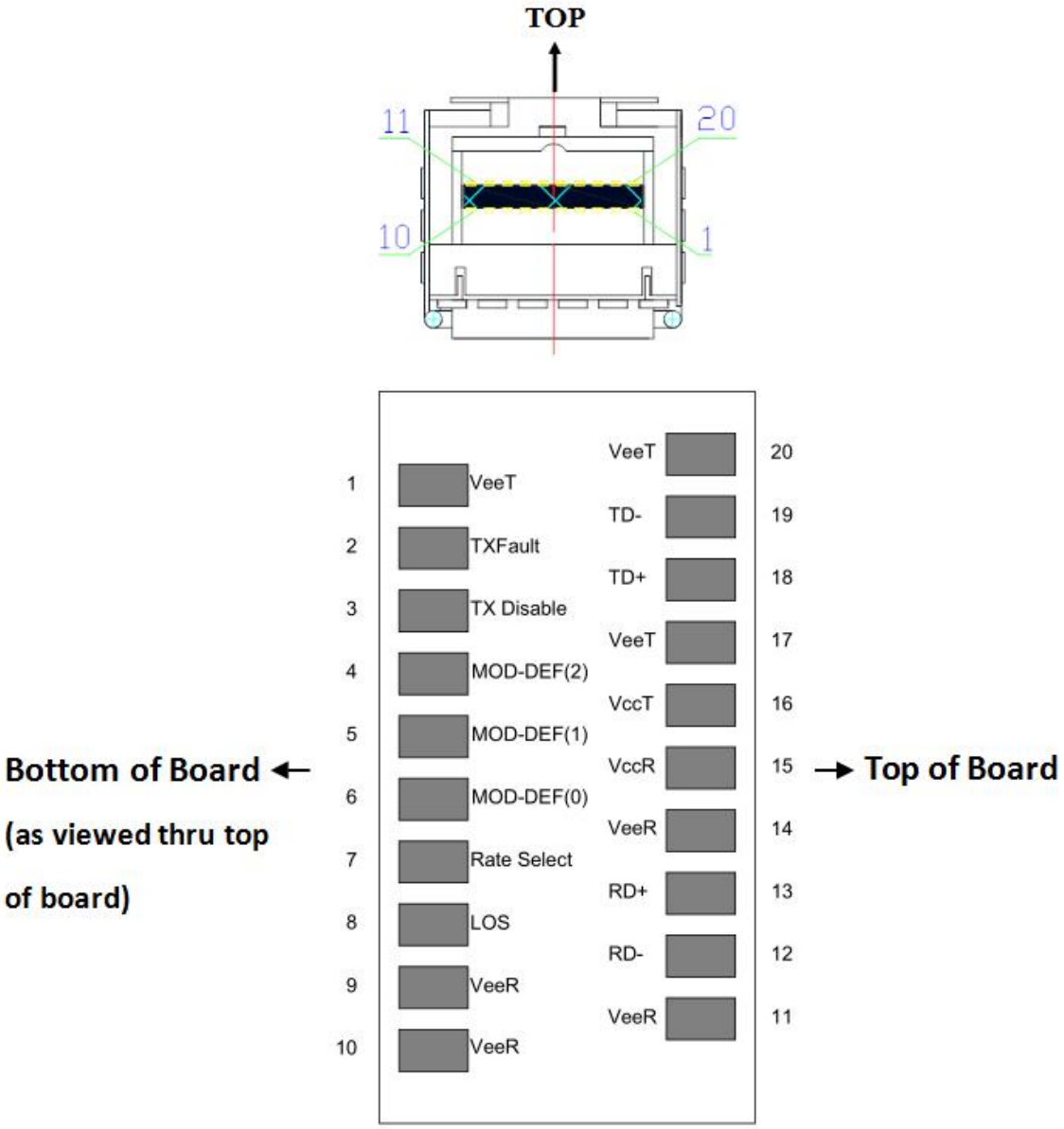

Pin	Pin Name	Plug Seq.	Name/Description	Note
1	$V_{EE}T$	1	Transmitter Ground	6
2	TX Fault	3	Transmitter Fault Indication	1
3	TX Disable	3	Transmitter Disable	2

Pin	Pin Name	Plug Seq.	Description	Note
4	MOD_DEF(2)	3	SDA Serial Data Signal	3
5	MOD_DEF(1)	3	SCL Serial Clock Signal	3
6	MOD_DEF(0)	3	Grounded to indicate that the module is present	3
7	Rate Select	3	Not in used	4
8	LOS	3	Loss of Signal	5
9	$V_{EE}R$	1	Receiver Ground	6
10	$V_{EE}R$	1	Receiver Ground	6
11	$V_{EE}R$	1	Receiver Ground	6
12	RD-	3	Inv. Received Data Out	8
13	RD+	3	Received Data Out	8
14	$V_{EE}R$	1	Receiver Ground	6
15	$V_{CC}R$	2	Receiver Power	7
16	$V_{CC}T$	2	Transmitter Power	7
17	$V_{EE}T$	1	Transmitter Ground	6
18	TD+	3	Transmit Data In	9
19	TD-	3	Inv. Transmit Data In	9
20	$V_{EE}T$	1	Transmitter Ground	6

Plug Seq.: Pin engagement sequence during hot plugging.

Notes:

1. TX_Fault is an open collector/drain output, which should be pulled up with a 4.7KΩ – 10KΩ resistor on the host board. Pull up voltage between 2.0V and V_{CC}T, R+0.3V. When high, output indicates a laser fault of some kind. Low indicates normal operation. In the low state, the output will be pulled to < 0.8V.
2. TX_ Disable is an input that is used to shut down the transmitter optical output. Its states are:
Low (0 – 0.8V): Transmitter on
(>0.8, < 2.0V): Undefined
High (2.0 – V_{CC}): Transmitter Disabled
Open: Transmitter Disabled
3. Mod-Def 0, 1, 2. These are the module definition pins. They should be pulled up with a 4.7KΩ – 10KΩ resistor on the host board. The pull-up voltage shall be V_{CC}T or V_{CC}R.
Mod-Def 0 is grounded by the module to indicate that the module is present
Mod-Def 1 is the clock line of two wire serial interface for serial ID
Mod-Def 2 is the data line of two wire serial interface for serial ID
4. Not in used.
5. LOS (Loss of Signal) is an open collector/drain output, which should be pulled up with a 4.7KΩ – 10KΩ resistor. Pull up voltage between 2.0V and V_{CC}T, R+0.3V. When high, this output indicates the received optical power is below the worst-case receiver sensitivity (as defined by the standard in use). Low indicates normal operation. In the low state, the output will be pulled to < 0.8V.
6. VeeR and VeeT may be internally connected within the SFP module.
7. V_{CC}R and V_{CC}T are the receiver and transmitter power supplies. They are defined as 3.3V 5% at the SFP connector pin. Maximum supply current is 300 mA. Recommended host board power supply filtering is shown below. Inductors with DC resistance of less than 1 should be used in order to maintain the required voltage at the SFP input pin with 3.3V supply voltage. When the recommended supply filtering network is used, hot plugging of the SFP transceiver module will result in an inrush current of no more than 30 mA greater than the steady state value. V_{CC}R and V_{CC}T may be internally connected within the SFP transceiver module.
8. RD-/+: These are the differential receiver outputs. They are AC coupled 100 differential lines which should be terminated with 100 (differential) at the user SERDES. The AC coupling is done inside the module and is thus not required on the host board.
9. TD-/+: These are the differential transmitter inputs. They are AC-coupled, differential lines with 100 differential terminations inside the module. The AC coupling is done inside the module and is thus not required on the host board.

IX. Host Board Layout

A typical host board mechanical layout for attaching the SFP Connector and Cage System is shown in Figures 1 and 2.

unit: mm

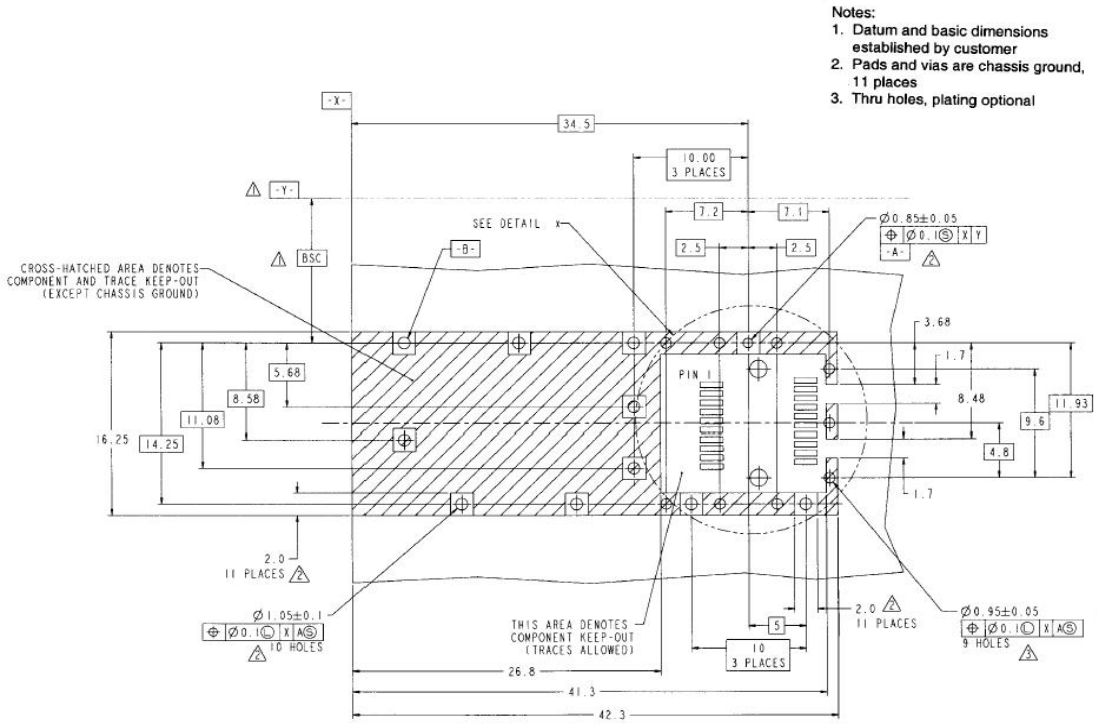

Figure 1. SFP Host Board Mechanical Layout

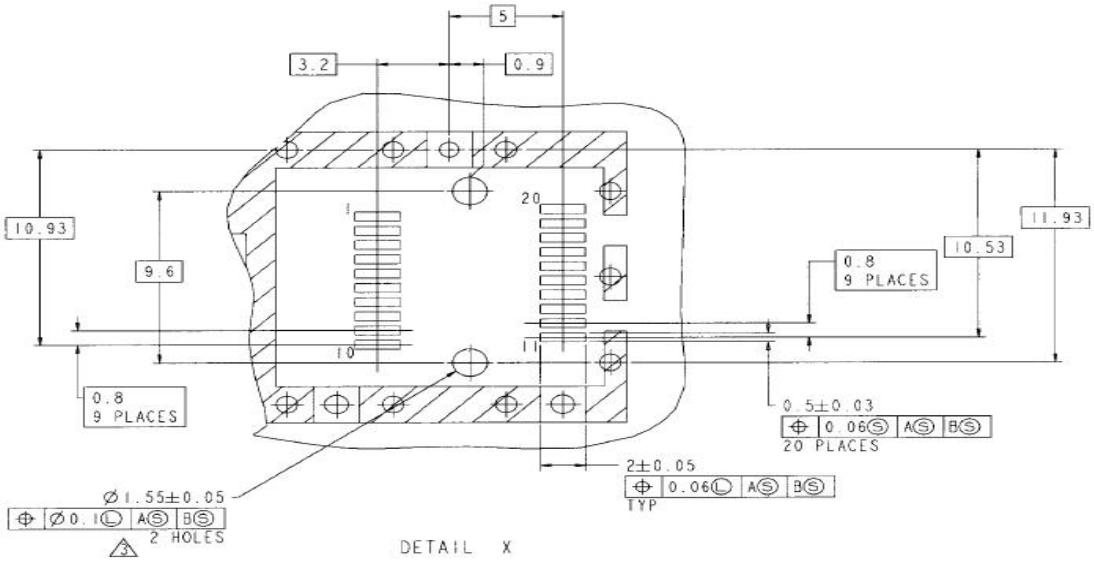

Figure 2. SFP Host Board Mechanical Layout (Cont.)

X. Recommended Circuit Schematic

unit: mm

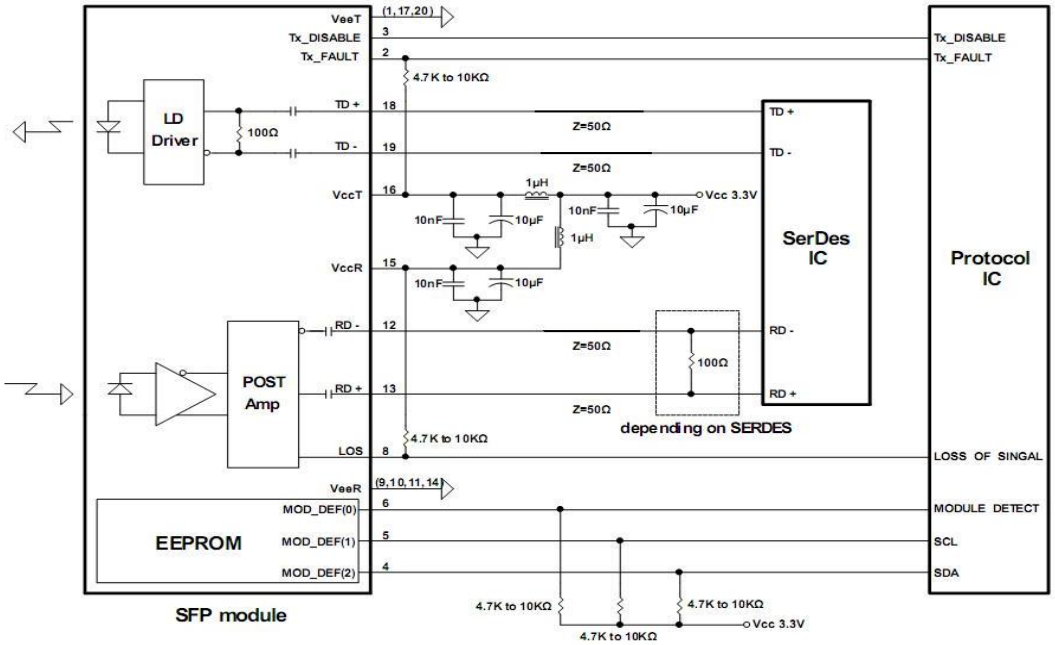

Figure 3. Recommended Circuit Schematic

XI. Module Outline Drawing

unit: mm

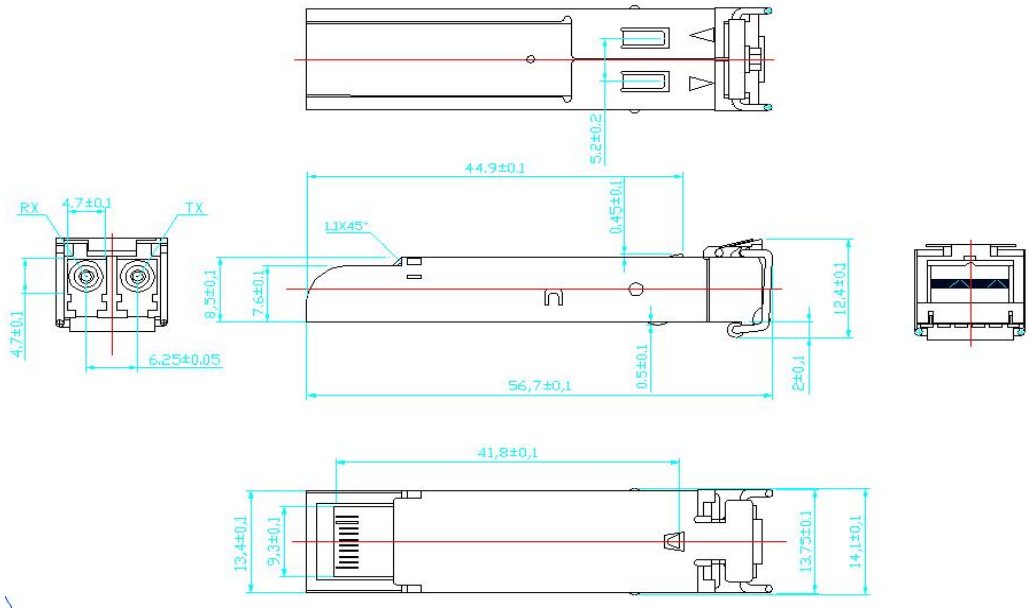

Figure 4. LC TYPE-1

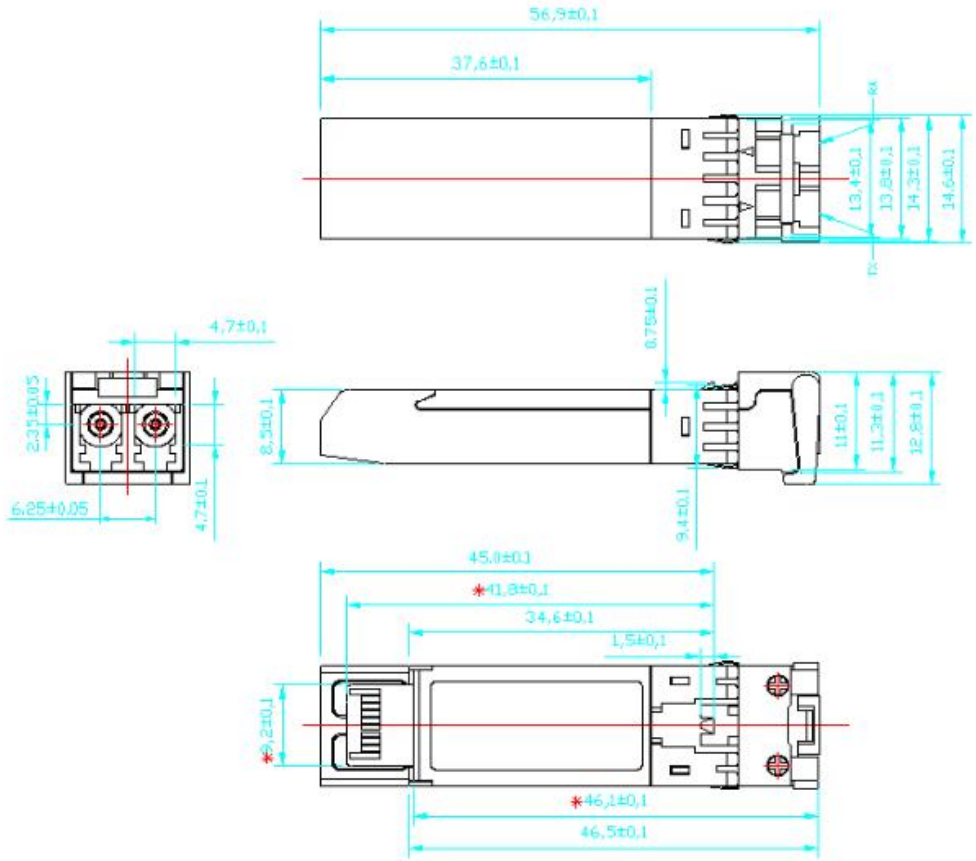

Figure 5. LC TYPE-2

Note: Specifications subject to change without notice.

Test Center

I. Compatibility Testing

Each fiber optical transceiver has been tested in host device on site in FS Assured Program to ensure full compatibility with over 200 vendors.

Cisco Catalyst C9500-24Y4C

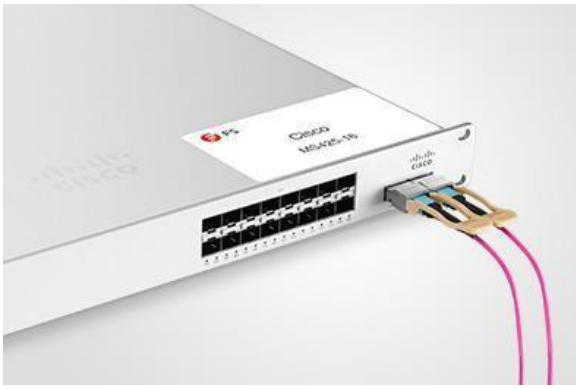

Cisco MS425-16

Brocade VDX 6940-144S

Dell EMC Networking Z9100-ON

Force⑩tm S60-44T

HUAWEI S6720-30L-HI-24S

Above is part of our test bed network equipment. For more information, please click the Test Bed PDF. It will be updated in real time as we expand our portfolio.

II. Performance Testing

Each fiber optical transceiver has been fully tested in FS Assured Program equipped with world's most advanced analytical equipment to ensure that our transceivers work perfectly on your device.

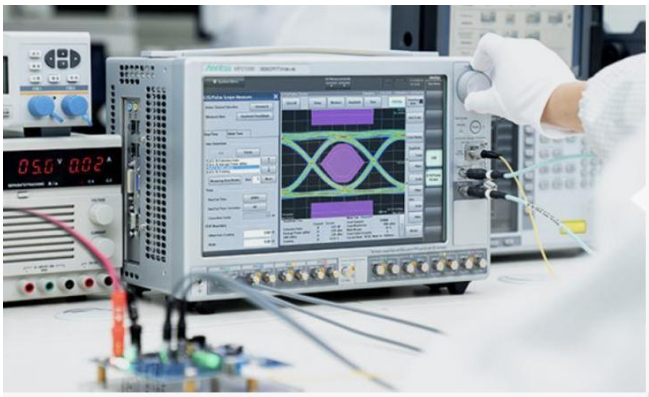

1. TX/RX Signal Quality Testing

Equipped with the all-in-one tester integrated 4ch BERT & sampling oscilloscope, and variable optical attenuator to ensure the input and output signal quality.

- Eye Pattern Measurements: Jitter, Mask Margin, etc
- Average Output Power
- OMA
- Extinction Ratio
- Receiver Sensitivity
- BER Curve

2. Reliability and Stability Testing

Subject the transceivers to dramatic changes in temperature on the thermal shock chamber to ensure reliability and stability of the transceivers.

- Commercial: 0 °C to 70 °C
- Extended: -5 °C to 85 °C
- Industrial: -40 °C to 85 °C

3. Transfer Rate and Protocol Testing

Test the actual transfer data rate and the transmission ability under different protocols with Network Master Pro.

- Ethernet
- Fibre Channel
- SDH/SONET
- CPRI

4. Optical Spectrum Evaluation

Evaluate various important parameters with the Optical Spectrum Analyzer to meet the industry standards.

- Center Wavelength, Level
- OSNR
- SMSR
- Spectrum Width

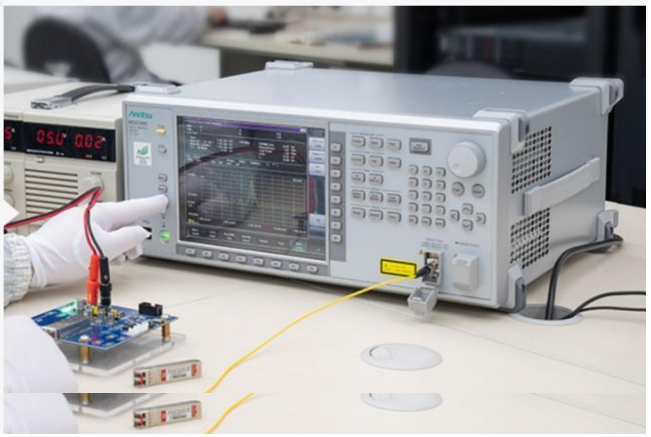

Part Number	Description
SFP-12G31-10	SFP, 12Gb/s, 1310nm, SMF, 10km, Single Transmitter, LC,DOM
SFP-12G31-20	SFP, 12Gb/s, 1310nm, SMF, 20km, Single Transmitter, LC,DOM